SET eXPerience 2021

Response to TV 3.0 Project CfP Phase-1 and 2 Physical Layer

DiBEG/Japan

Proposal of Physical Layer by DiBEG

DiBEG
Digital Broadcasting Experts Group

1. General

We, DiBEG, or Digital Broadcasting Experts Group, of Japan, proposed Ph-1 and Ph-2 of the physical layer in response to the TV 3.0 CfP (Call for Proposal) issued by the SBTVD Forum. We describe the outline of our technical proposal of Ph-1 and Ph-2 for the physical layer.

2. Outline of Physical Layer

Our proposed Physical Layer is planning 4K or 8K services in the next-generation digital terrestrial TV broadcasting (DTTB) services in Japan (Advanced ISDB-T). The Advanced ISDB-T technology is applied to this physical layer in our proposal.

We offered the specifications of this Advanced ISDB-T in our proposal. This document describes the outline of the Advanced ISDB-T features.

Ph-1 Proposal of Physical Layer

DiBEG
Digital Broadcasting Experts Group

We submitted the statement based on the CfP requirement.
The following description is outline of the statement for Physical Layer.

PL1.1: Frequency Band

Basically the Advanced ISDB-T works in the UHF band from 470 to 698MHz. The supported frequency band is based on Japan's frequency allocation for terrestrial broadcasting. The frequency bands can be easily extended to other range.

PL1.2: Channel Bandwidth

Basically the Advanced ISDB-T supports 6MHz bandwidth.
The Advanced ISDB-T is under development and can be extended to support other bandwidth in the future.

Ph-1 Proposal of Physical Layer

DiBEG
Digital Broadcasting Experts Group

PL1.3: Co-channel PR (wanted: ISDB-T / unwanted: TV 3.0); ≦19dB

Considering the RF signal of the Advanced ISDB-T is of an OFDM signal similar to that of ISDB-T, the impact of interference is expected to be similar the interference from ISDB-T. We tested with the required D/U to be less than 19dB in Japan.

PL1.4: Adjacent channel PR (wanted: ISDB-T / unwanted: TV 3.0); ≦-36dB

The 5.83MHz bandwidth of the Advanced ISDB-T is slightly larger than the 5.57MHz bandwidth of the current ISDB-T, and the impact to PR is very small.

It is almost the same as ISDB-T(wanted) to ISDB-T(unwanted) PR. We tested with the required D/U to be less than -36dB in Japan.

PL2.1: MIMO; 2x2

We had various test results on the Advanced ISDB-T including field tests of 2x2 MIMO transmission.

Ph-1 Proposal of Physical Layer

DiBEG
Digital Broadcasting Experts Group

PL2.2: Multi RF channel transmission; Channel bonding

Channel bonding function is included in the Advanced ISDB-T. It is considered to be implemented with the Advanced ISDB-T.

PL2.3: High-speed reception; 120km/h

It can be achieved technically by choosing appropriate parameters with the Advanced ISDB-T. We tested this at 3km/h and 70km/h by 16k FFT in Japan. Reception at 120km/h by 8k FFT will be achievable.

PL2.4: Spectrum efficiency; C/N 0dB in Rayleigh channel

We tested the required C/N at 3km/h and 70km/h by 16k FFT in Japan. The required C/N shall be achieved at 120km/h by 8k FFT.

PL3.1: Wake-up capability

The Wake-up capability is included in Japan's next gen. DTTB requirements, it is considered to be implemented in the Advanced ISDB-T.

Ph-2 Proposal of Physical Layer

DiBEG
Digital Broadcasting Experts Group

1. Specifications of the technical proposal
   DiBEG submitted the technical specification document on the Advanced ISDB-T. Also we conducted laboratory tests and submitted its test report.

2. Comment on the technical proposal
   DiBEG mentioned the detailed technical specification of the Advanced ISDB-T. It consists of basic structure, primary modulation, frame structure and OFDM modulation.

   Laboratory tests were performed at a manufacture's factory in Japan. DiBEG conducted measurements of Gaussian noise, Rayleigh fading, ISDB-T interference, FM Radio interference and so on. We believe that the Advanced ISDB-T can satisfy most of the requirements.

Introduction of Advanced ISDB-T

DiBEG
Digital Broadcasting Experts Group

The Advanced ISDB-T inherits the features of current ISDB-T such as OFDM, hierarchical transmission and partial reception. While inheriting the features of ISDB-T, the Advanced ISDB-T adopts new signal structures that expands transmission capacity with multiple levels of robustness.

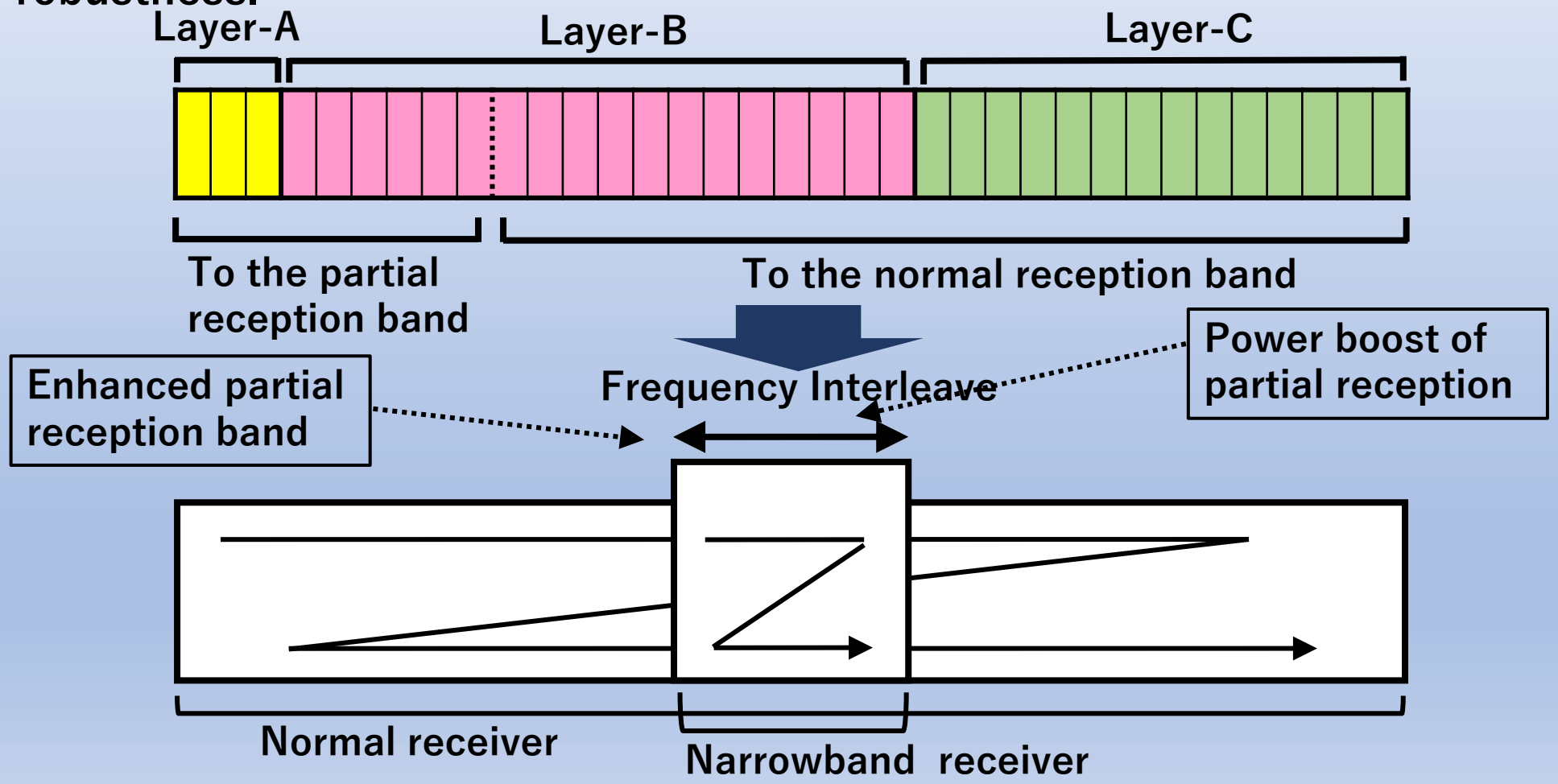

FDM-based Transmission

The Advanced ISDB-T consists of the OFDM units enabling SISO, MISO and Space Division Multiplexing (SDM) MIMO transmission. Transmission of three hierarchical layers (layers A, B, and C) can also be achieved. For SISO transmission, there is one output signal; while MISO and MIMO transmission make two signals as output.

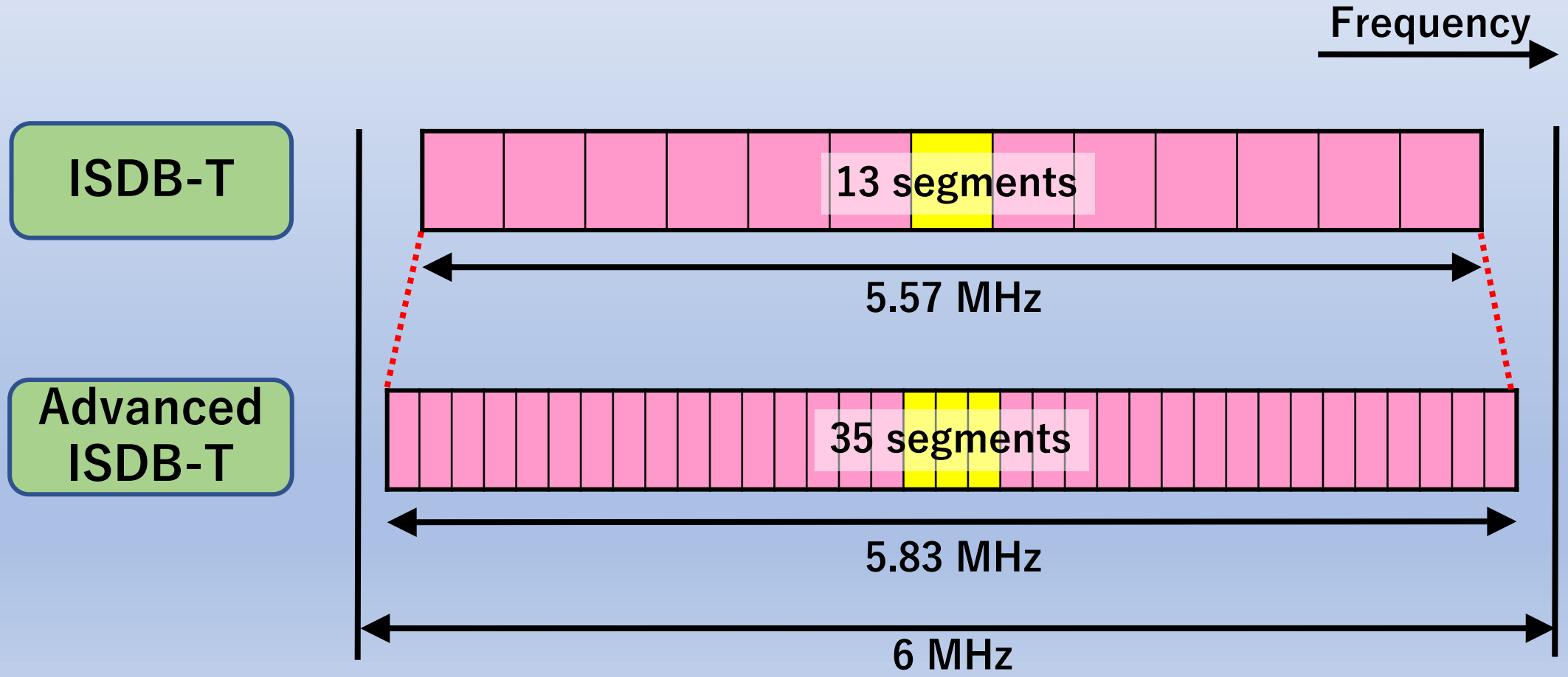

Transmission parameters

DiBEG
Digital Broadcasting Experts Group

Standard	ISDB-T (Mode3)	Advanced ISDB-T		
Channel bandwidth	6 MHz	6 MHz		
Occupied bandwidth	5.57… MHz	5.57…MHz	5.83…MHz	
Number of segments	13	33 + adjustment bands	35	
Bandwidth of segment	429 kHz	167 kHz		
FFT size (N_{FFT})	8,192 (8k)	8,192 (8k)	16,384 (16k)	32,768 (32k)
Number of carriers	5,617	7,561	15,121	30,241
Scattered Pilot ratio	1/12	1/3, 1/6, 1/12, 1/24, 1/48		
Carrier modulation scheme	QPSK, 16QAM, 64QAM (UC)	QPSK, 16QAM, 64QAM, 256QAM, 1024QAM, 4096QAM (UC, NUC)		
Effective OFDM symbol length	1,008 ms	1,296 ms	2,592 ms	5,184 ms
Guard interval ratio	1/4, 1/8, 1/16, 1/32	1/4, 1/8, 800/N_{FFT}	1/4, 1/8, 1/16, 800/N_{FFT}	1/8, 1/16, 1/32, 800/N_{FFT}
GI duration (8kFFT, GI = 1/8)	126 ms	162 ms		
IFFT sampling frequency	512/63 = 8.12… MHz	512/81 = 6.32… MHz		
MIMO	No	2x2 (H,V Dual Polarization)		
Channel Bonding	No	Planed to be supported		
wake-up capability	Yes	Planed to be supported		
Supported RF band	470-710MHz	470-710MHz (Japan's DTTB Frequency allocation)		

Informative References

DiBEG
Digital Broadcasting Experts Group

No.	Document	Remarks
1	ARIB standard: “Transmission System for Digital Terrestrial Television Broadcasting,” ARIB STD-B31 Version 2.2-E1 (Mar. 2014)	
2	M. Nakamura et al.: “A Study on the Transmission System for an Advanced ISDB-T,” Proc. 14th IEEE Int. Symp. on BMSB, 4A-2 (Jun. 2019)	
3	N. Shirai et al.: “Laboratory Experiments and Large-scale Field Trials for Evaluating the Advanced ISDB-T,” Proc. 14th IEEE Int. Symp. on BMSB, 4A-4 (Jun. 2019)	
4	T. Shitomi, et al.: “Fixed Reception Performance of FDM-based Transmission System for Advanced ISDB-T,” SET INTERNATIONAL JOURNAL OF BROADCAST ENGINEERING, 6, 1, pp. 9-20 (Jan. 2021)	
5	ARIB standard: “MMT-Based Media Transport Scheme in Digital Broadcasting Systems,” ARIB STD-B60 Version 1.13-E1 (Oct. 2018)	
6	Recommendation ITU-R BO.2098-0, “Transmission system for UHDTV satellite broadcasting”, (Dec. 2016)	

DiBEG
Digital Broadcasting Experts Group

Laboratory Test Report for Advanced ISDB-T Physical Layer

DiBEG/Japan

External View of MIMO Transmission Equipment

DiBEG
Digital Broadcasting Experts Group

The MIMO Advanced ISDB-T transmission system is shown below.
We prepared existing ISTB-Tb Hendend products also.

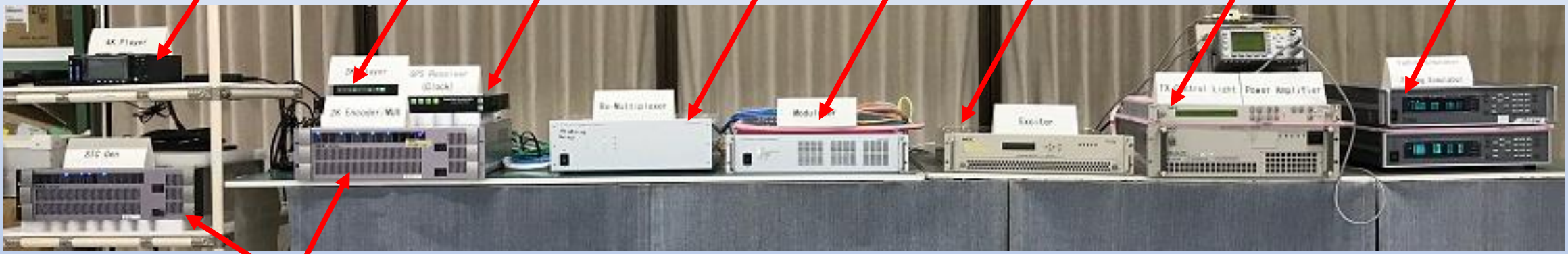

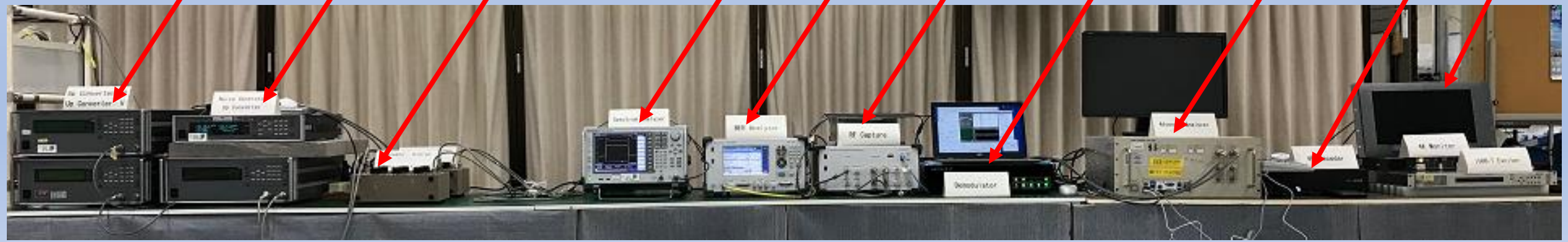

Comparison Table between SISO and MIMO

DiBEG
Digital Broadcasting Experts Group

Comparison table between ISDB-T and Advanced ISDB-T system.

Standard	ISDB-T	SISO Advanced ISDB-T	MIMO Advanced ISDB-T
Video Coding	MPEG-2, MPEG-4	VVC*	VVC*
Speed (Bit rate)	16.0Mbps	Up to 54Mbps@16kFFT	Up to 108Mbps@16kFFT
Program	2K	2K, 4K and 8K	2K, 4K and 8K
Segment Number	13	35	35
Bandwidth	5.57MHz	5.83MHz	5.83MHz
Layer	Layer-A, B, C	Layer-A, B, C, LLch	Layer-A, B, C, LLch
FFT Size	1,024, 4096, 8,192	8,192, 16,384, 32,768	8,192, 16,384, 32,768
Guard Interval	1/4, 1/8, 1/16, 1/32	1/4, 1/8, 1/16, 1/32, 1/256, 800/FFT size	1/4, 1/8, 1/16, 1/32, 1/256, 800/FFT size
Modulation	QPSK, 16QAM, 64QAM	QPSK, 16QAM, 64QAM 256, 1024, 4096QAM	QPSK, 16QAM, 64QAM 256, 1024, 4096QAM
Error Correction	RS + convolutional code	BCH + LDPC	BCH + LDPC

* VVC is under study and evaluation.

Proposed Parameters for TV 3.0

DiBEG
Digital Broadcasting Experts Group

The following transmission parameters were applied to the laboratory tests in Japan. These parameters were used for 2K transmission for SISO and MIMO tests.

- Modulation : QPSK
- Constellation : Uniform Constellation
- Error correction : LDPC (3/16) + BCH
- FFT : 16k
- GI ratio : 800/16384
- Pilot : Dx=6, Dy=2
- Time Interleave : I=3
- Layer : Layer-A, 35segments
- Program : 2K (1080p), 3.4Mbps

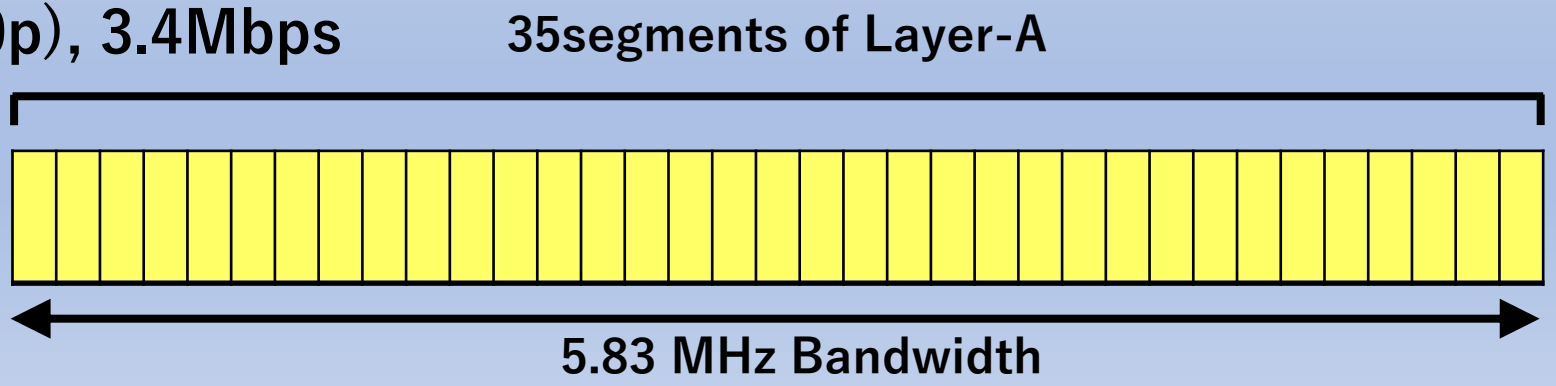

Evaluation of Call for Proposal Ph-2

DiBEG
Digital Broadcasting Experts Group

The following measuring items are conducted in accordance with CfP.

-1) RF Frequency Accuracy
-2) Phase noise and Spectrum
-3) RF/IF signal power
-4) RF out of band emissions and linearity characterization
-5) I/Q analysis – Constellation and MER
-6) C/N - Carrier power vs AWGN by SISO and MIMO
-7) C/N (Carrier power vs Rayleigh / AWGN) by SISO and MIMO
-8) Receiver maximum and minimum level by SISO and MIMO
-9) Co-channel Interference with own system by SISO and MIMO
-10) Co-channel and adjacent channel interference to ISDB-T by SISO
-11) Impulse noise by SISO
-12) Single echo static multipath interference by SISO
-13) Channel bonding by MIMO
-14) Channel identification stability in frequency reuse-1 by MIMO
-15) FM Radio (88 to 108 MHz) Interference by SISO

RF Frequency Accuracy

The RF frequency was measured under the MOD-H and MOD-V output conditions. U/C was applied to the Ch-10 and 33 measurements.
The Advanced ISDB-T exciter was tuned to Ch-30 for measurements.

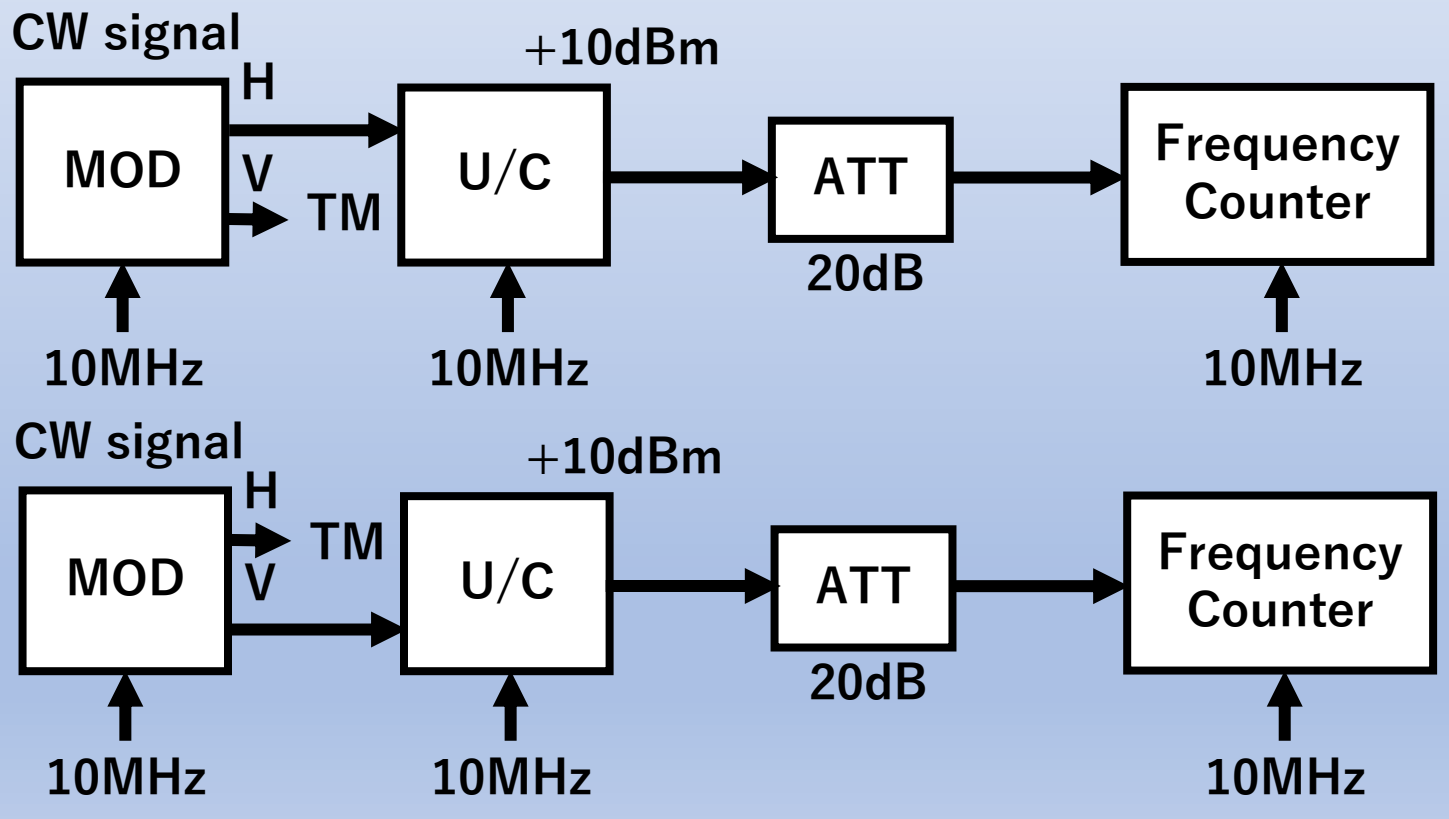

Results of RF Frequency Accuracy

DiBEG
Digital Broadcasting Experts Group

Measuring table is mentioned as follows.

Channel	H/V	Measured Frequency	Deviation(ppm)	Remarks
10 (192-198MHz)	H	195.1428571MHz	0ppm	By U/C
ditto	V	195.1428571MHz	0ppm	ditto
33 (584-590MHz)	H	587.1428571MHz	0ppm	ditto
ditto	V	587.1428571MHz	0ppm	ditto
30 (566-572MHz)	H	569.1428570MHz	0.0002ppm	By Exciter
ditto	V	NA	NA	ditto

Phase noise and Spectrum

The RF frequency and spectrum were measured under the MOD-H and MOD-V output conditions. U/C was applied to the Ch-10 and 33 measurements. The Advanced ISDB-T exciter was tuned to Ch-30. The MOD output was reflected to CW. Please take care to adjust Sweep bandwidth, Resolution bandwidth and Sweep time.

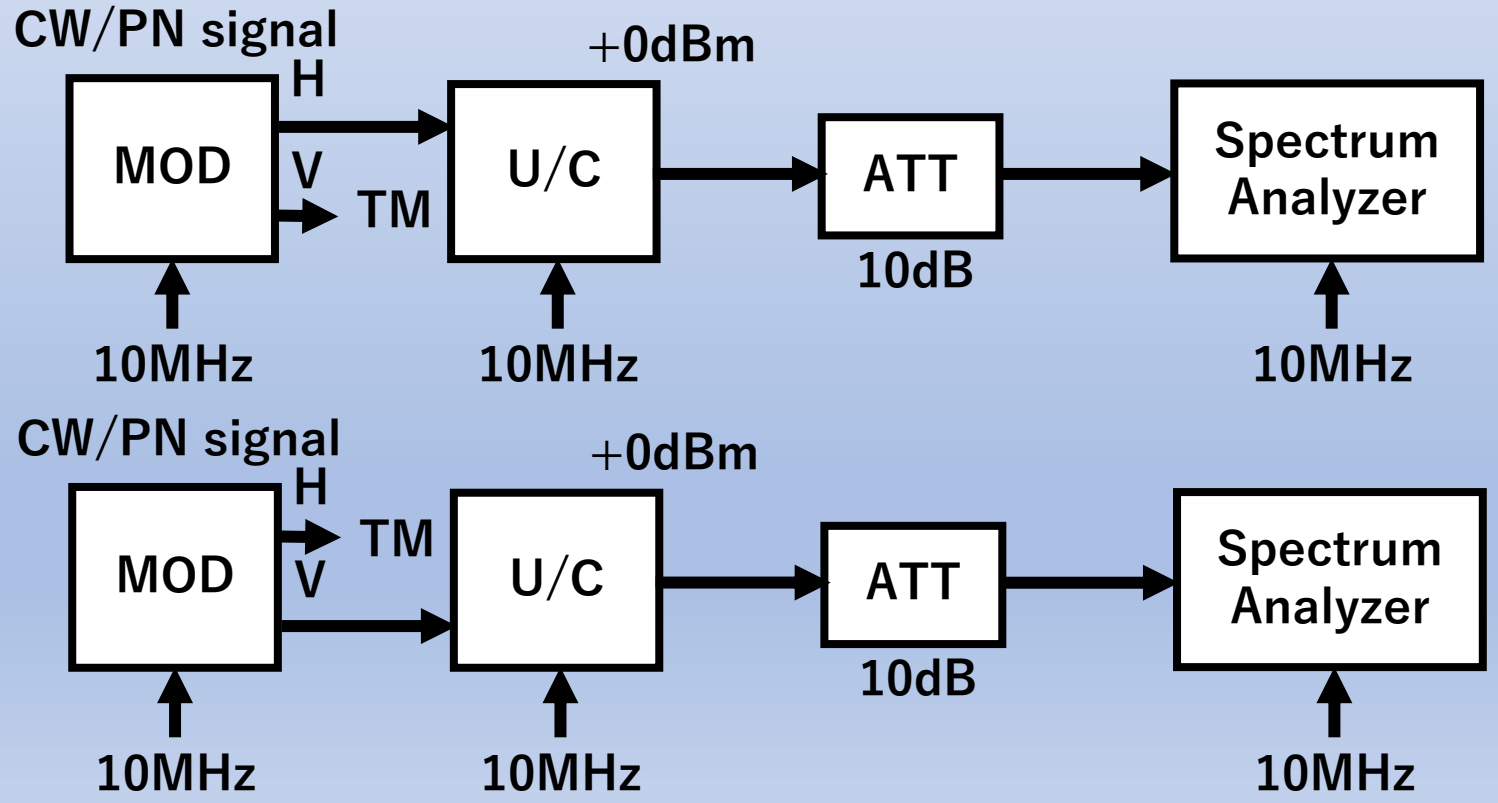

Results of Phase noise and Spectrum

DiBEG
Digital Broadcasting Experts Group

Measuring table is mentioned as follows.

Channel	H/V	Measured Frequency	Spectrum (Photo)	Remarks
10 (192-198MHz)	H	Refer to 6.2.1	Refer to 6.2.2	By U/C
ditto	V	Refer to 6.2.3	Refer to 6.2.4	ditto
33 (584-590MHz)	H	Refer to 6.2.5	Refer to 6.2.6	ditto
ditto	V	Refer to 6.2.7	Refer to 6.2.8	ditto
30 (566-572MHz)	H	Refer to 6.2.9	Refer to 6.2.10	By Exciter
ditto	V	N/A	N/A	ditto

* Regarding measurement of Phase Nosie, Anritsu Signal Analyzer was used and the integral values in the range of 10Hz to 1MHz were measured 5 times on average.
* The spectrum was measured with the setting of Span: 20MHz, RBW: 10kHz and VBW: 300Hz.

Results of Phase noise and Spectrum

DiBEG
Digital Broadcasting Experts Group

Measuring photos are mentioned as follows.

6.2.1

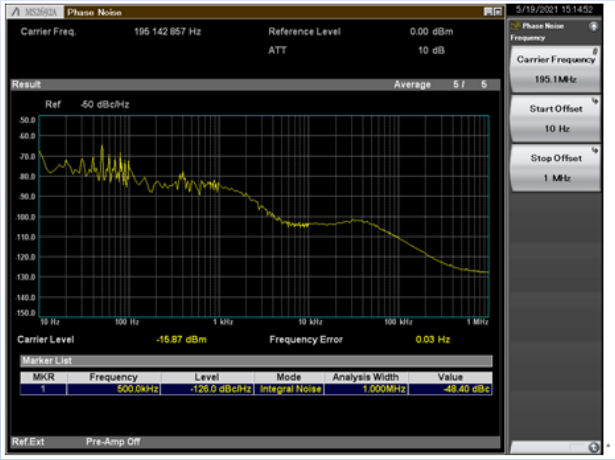

6.2.2

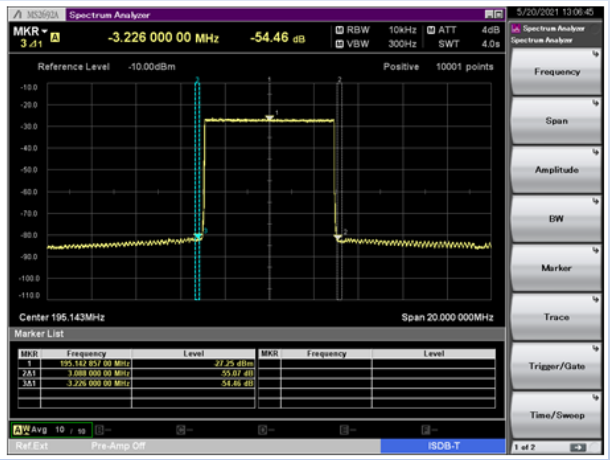

6.2.3

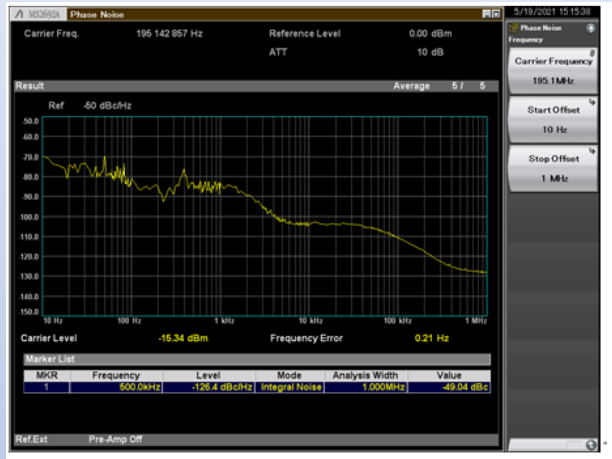

6.2.4

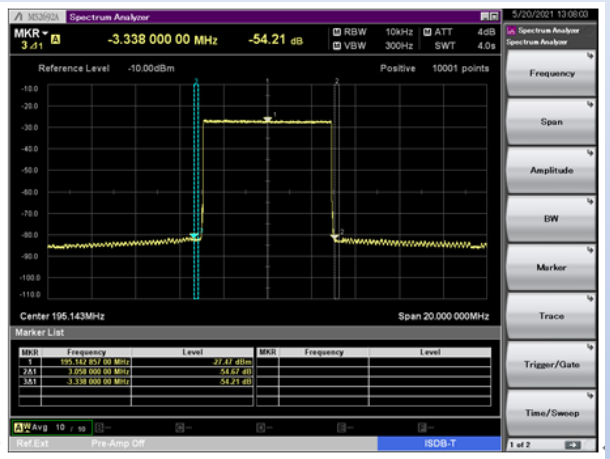

6.2.5

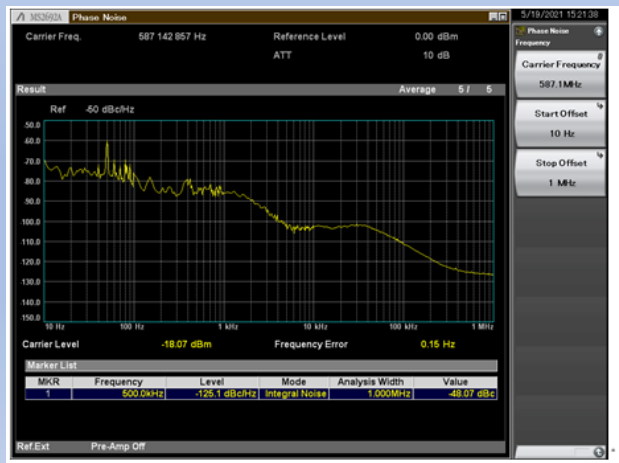

6.2.6

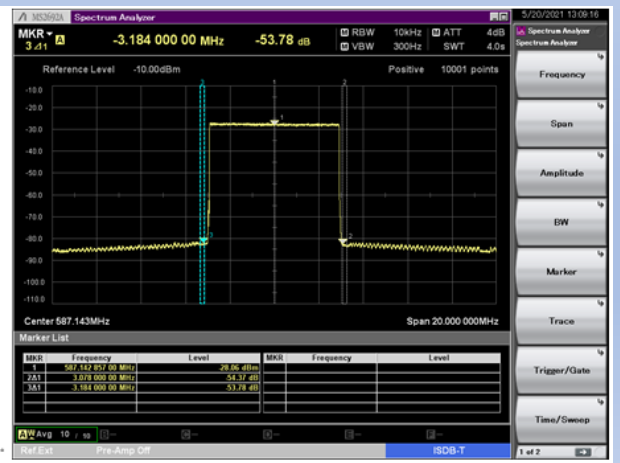

6.2.7

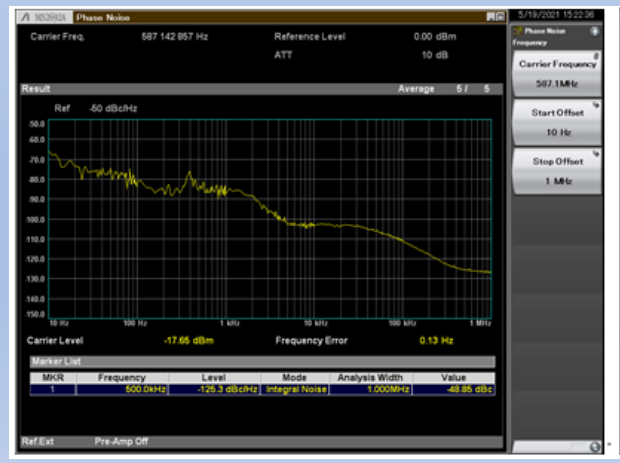

6.2.8

Results of Phase noise and Spectrum

DiBEG
Digital Broadcasting Experts Group

Measuring photos are mentioned as follows.

6.2.9

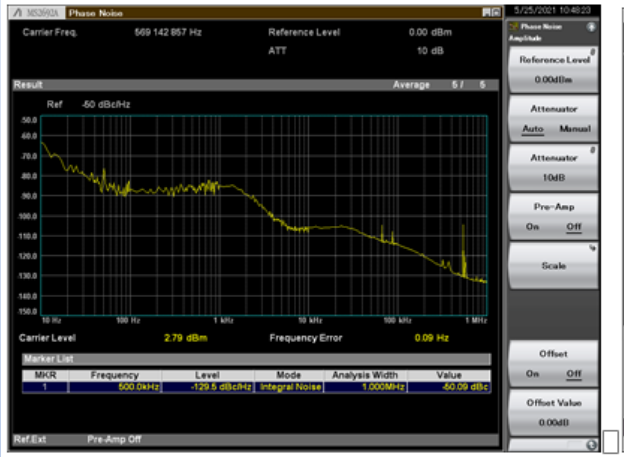

6.2.10

RF/IF signal power

The IF and RF powers were measured under the MOD-H and MOD-V output conditions by the Power Meter. The IF was measured at output of MOD. The U/C was applied to the Ch-10 and 33 measurements.
The Advanced ISDB-T exciter was tuned to Ch-30.

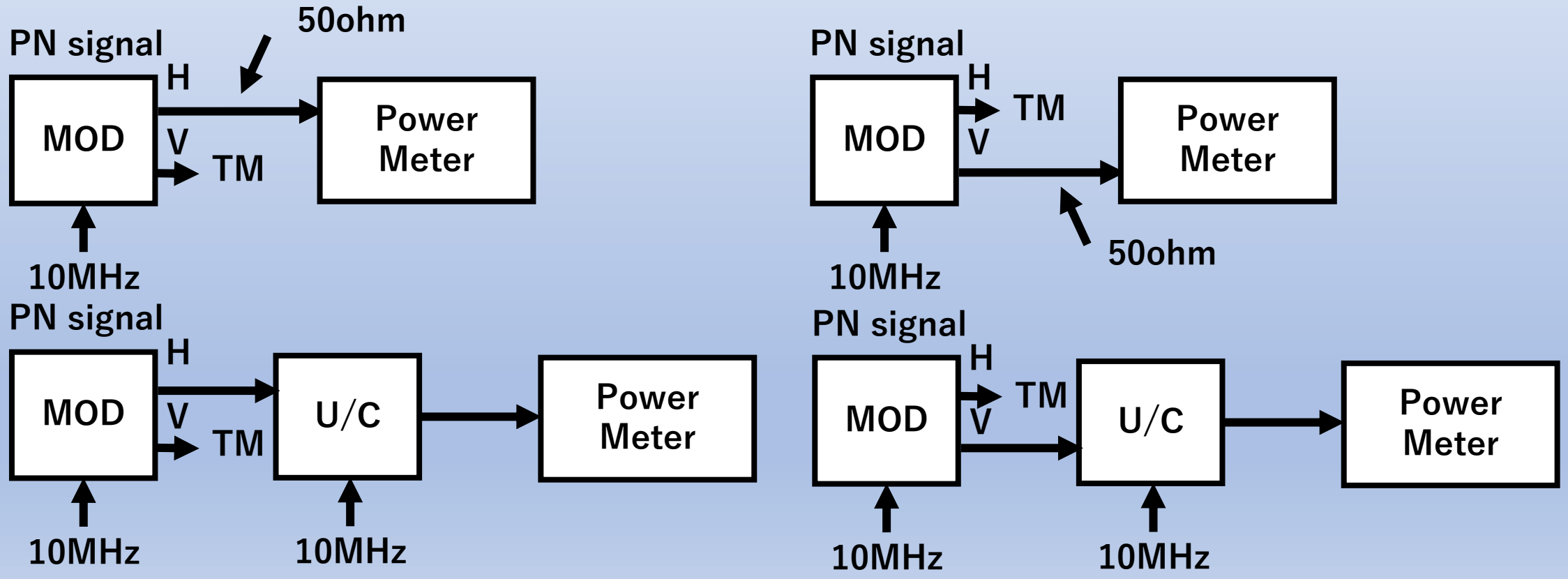

Results of RF/IF signal power

DiBEG
Digital Broadcasting Experts Group

Measuring table is mentioned as follows.

Channel	H/V	Measured Power (dBm)	Remarks
IF (37.15MHz)	H	-9.82dBm	
ditto	V	-9.56dBm	
10 (192-198MHz)	H	-0.25dBm	By U/C
ditto	V	-0.42dBm	Ditto
33 (584-590MHz)	H	-0.51dBm	Ditto
ditto	V	-0.52dBm	Ditto
30 (566-572MHz)	H	6.03dBm *	By Exciter
ditto	V	N/A	Ditto

* Exciter output level is +6dBm.

RF out of band emissions and linearity characterization (Spectrum Mask)

The spectrum was measured under the MOD-H and MOD-V output conditions. U/C was applied to the Ch-10 and 33 measurements. The Advanced ISDB-T exciter was tuned to Ch-30. Refer to ITU-R SM.1541-6 Annex.6.

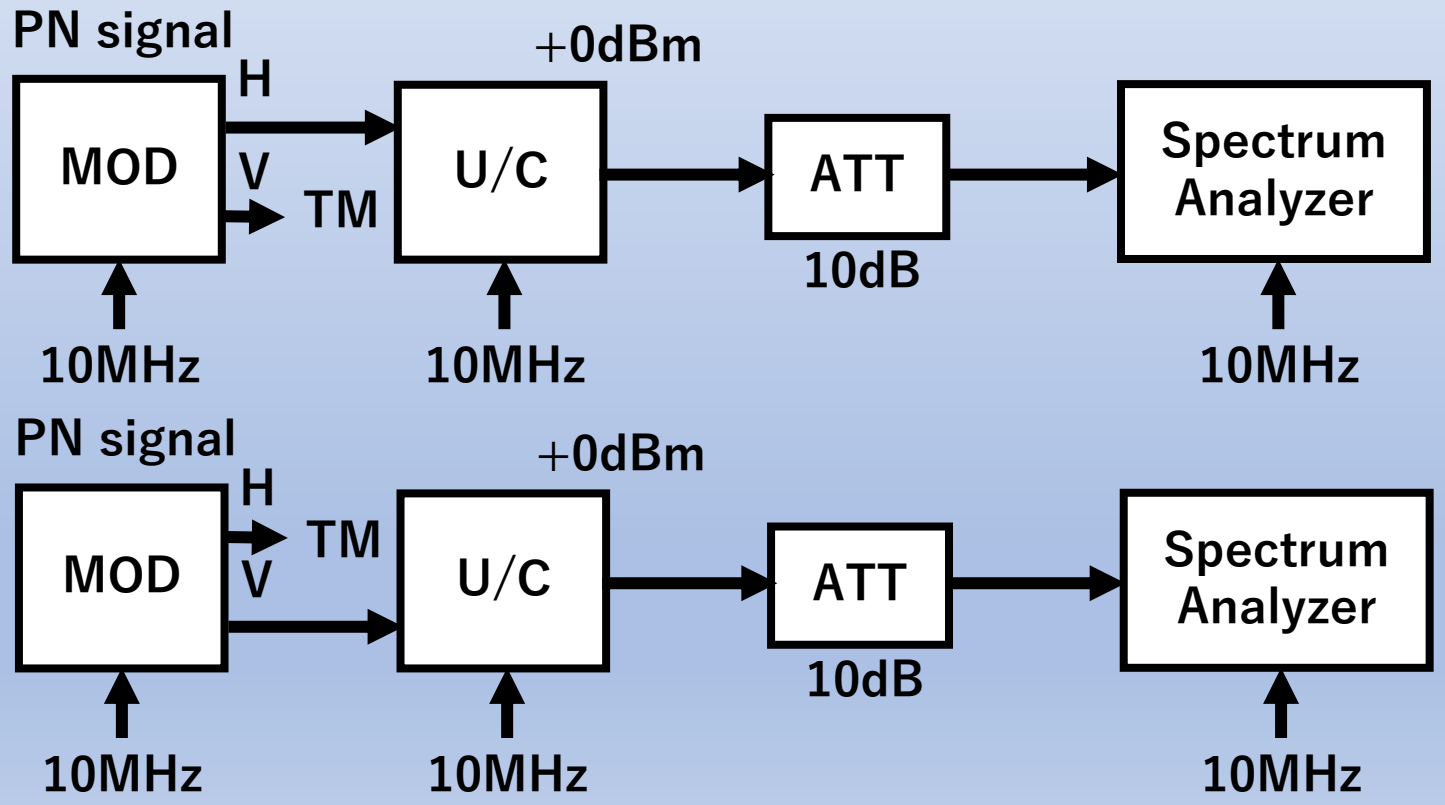

Results of RF out of band emissions and linearity characterization (Spectrum Mask)

DiBEG
Digital Broadcasting Experts Group

Measuring table is mentioned as follows.

Channel	H/V	Spectrum Mask (Photo)	Remarks
IF (34.15 - 40.15MHz)	H	Refer to 6.4.1	By MOD
ditto	V	Refer to 6.4.2	Ditto
10 (192-198MHz)	H	Refer to 6.4.3	By U/C
ditto	V	Refer to 6.4.4	Ditto
33 (584-590MHz)	H	Refer to 6.4.5	Ditto
ditto	V	Refer to 6.4.6	Ditto
30 (566-572MHz)	H	Refer to 6.4.7	By Exciter
ditto	V	N/A	Ditto

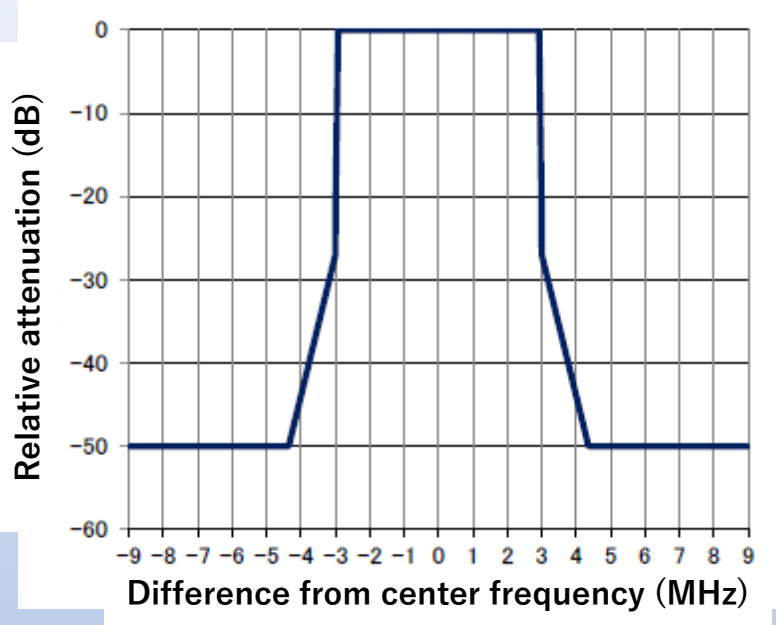

Difference from center frequency (MHz)	Relative attenuation (dB)
-4.36	-50
-3.00	-27
-2.99	-20
-2.92	0
+2.92	0
+2.99	-20
+3.00	-27
+4.36	-50

* The breakpoint of the spectrum mask was applied to the specifications of domestic field tests in the metropolitan cities in Japan.
* Regarding the Spectrum emission mask measurement function of the Signal Analyzer (MS series) of Anritsu, the above breakpoint was inserted for measurements

Results of RF out of band emissions and linearity characterization (Spectrum Mask)

DiBEG
Digital Broadcasting Experts Group

Measuring photos are mentioned as follows.

6.4.1

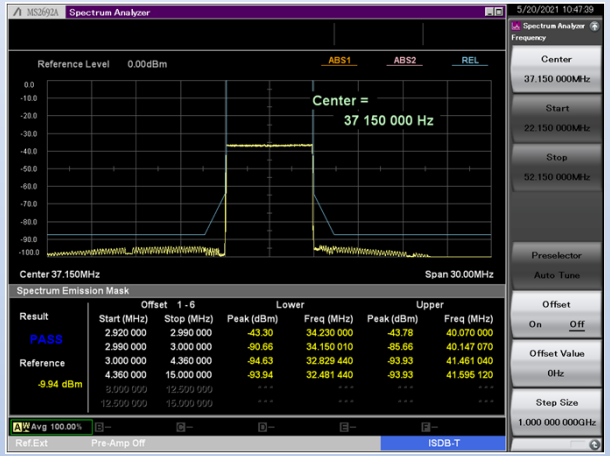

6.4.2

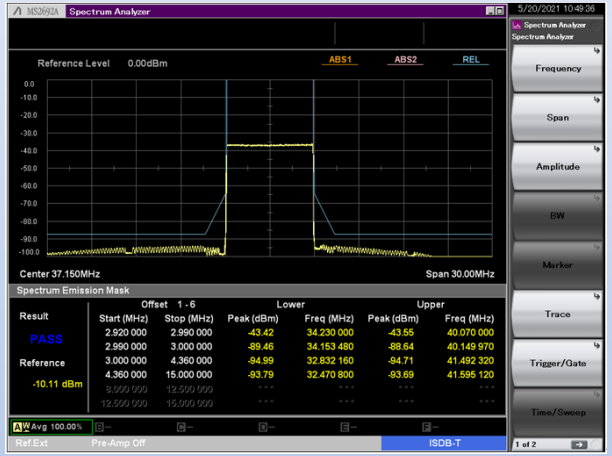

6.4.3

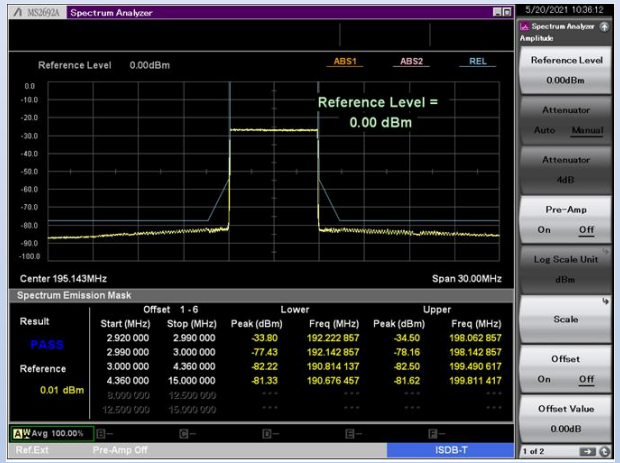

6.4.4

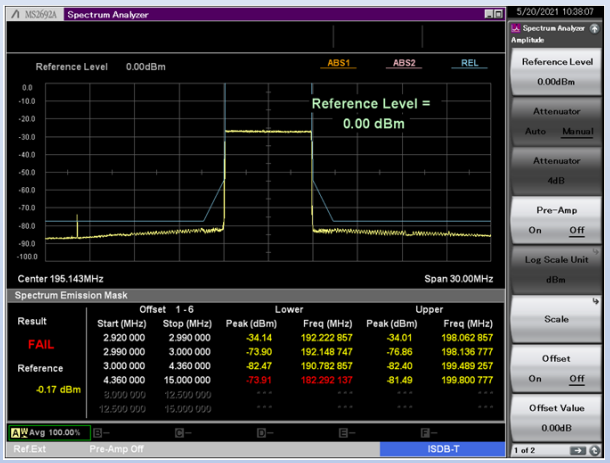

6.4.5

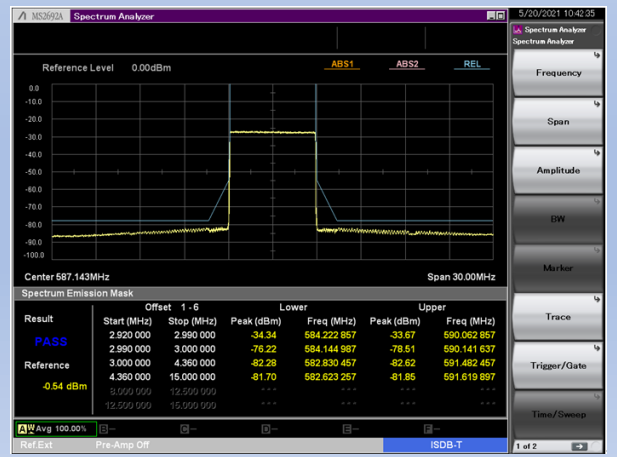

6.4.6

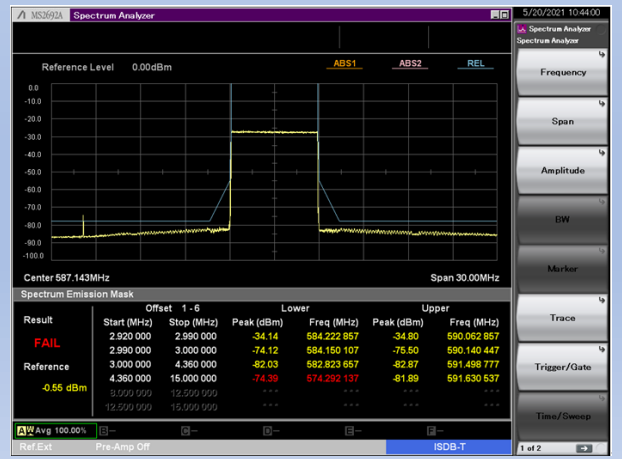

6.4.7

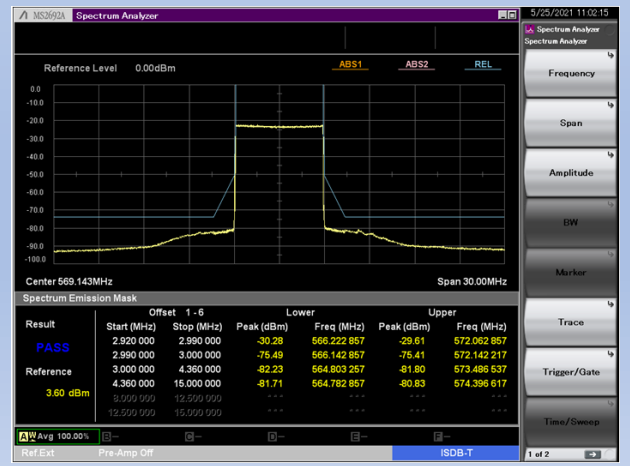

I/Q analysis – Constellation and MER

Constellation and MER are measured under MOD H and MOD V output by Advanced Analyzer. U/C is applied to Ch-10 and 33.

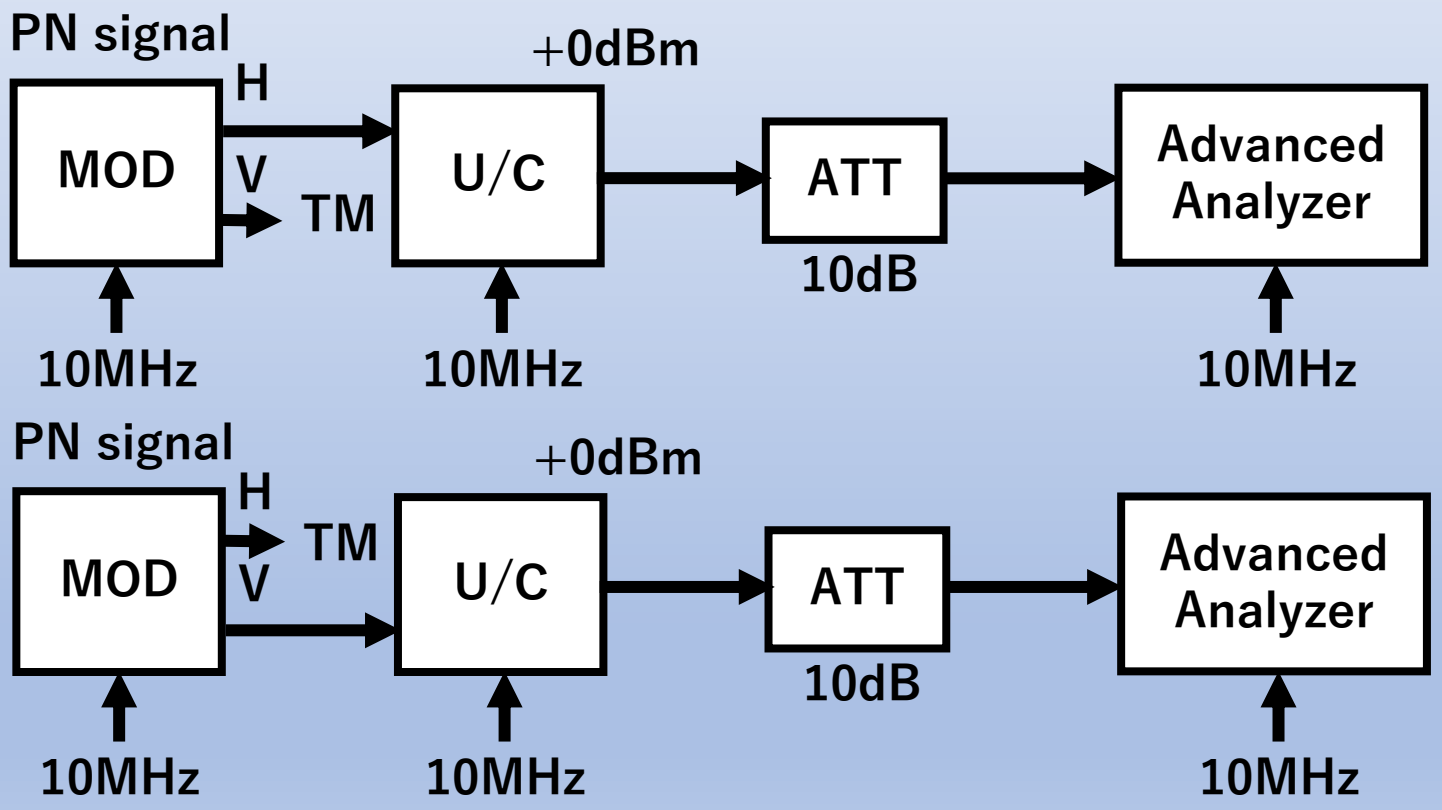

I/Q analysis – Constellation and MER

DiBEG
Digital Broadcasting Experts Group

Measuring table is mentioned as follows.

Channel	H/V	Constellation	MER	Remarks
10 (192-198MHz)	H	N/A	N/A	By U/C
ditto	V	N/A	N/A	Ditto
33 (584-590MHz)	H	Refer to 6.5.1	38.3dB	Ditto
ditto	V	ditto	38.7dB	Ditto
30 (566-572MHz)	H	Refer to 6.5.2	38.9dB	By U/C
ditto	V	ditto	38.3dB	Ditto

* Advanced Analyzer can't measure VHF band.

I/Q analysis – Constellation and MER

DiBEG
Digital Broadcasting Experts Group

Measuring photos are mentioned as follows.

6.5.1

6.5.2

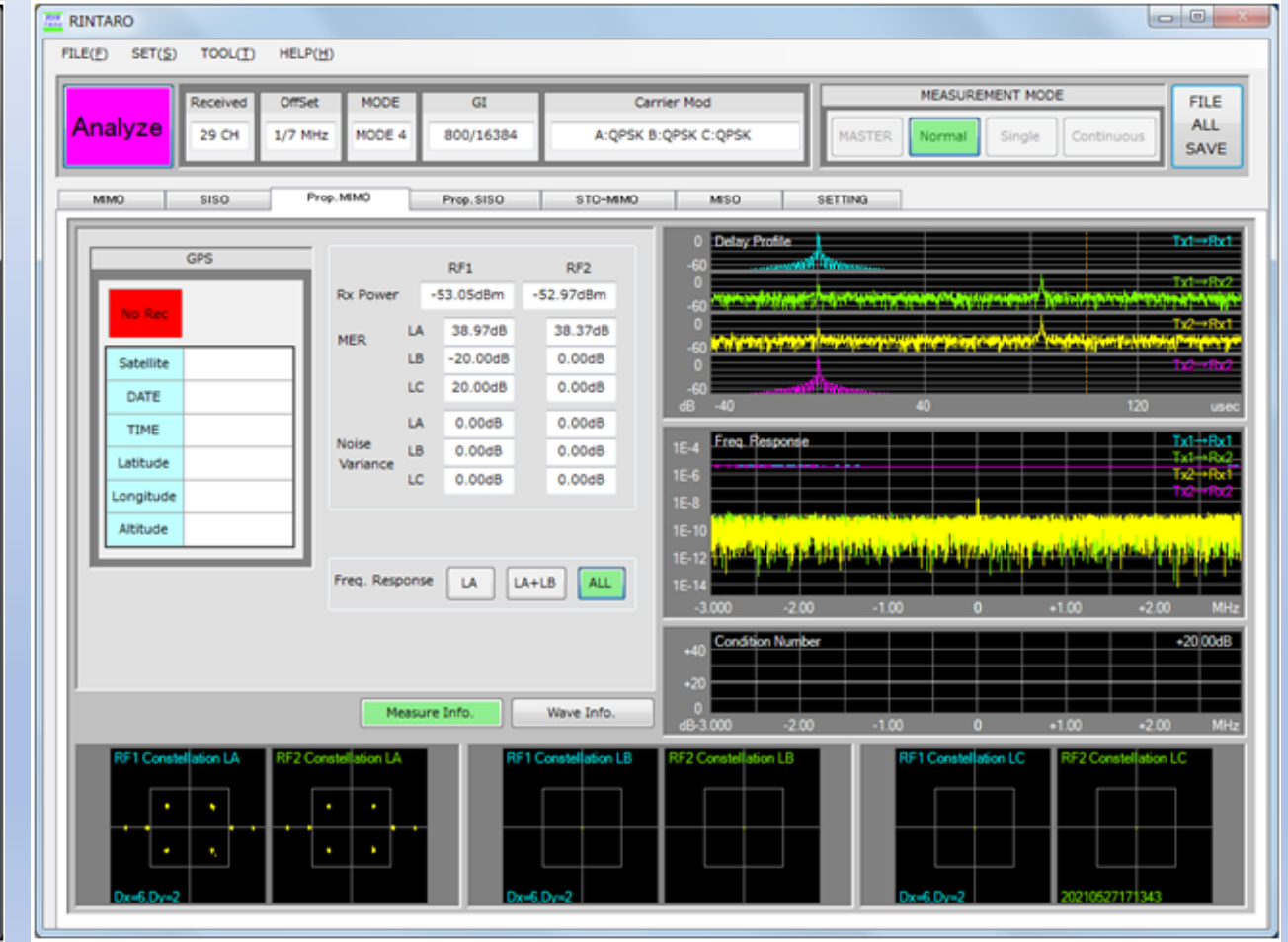

C/N - Carrier power vs. AWGN by SISO and MIMO

DiBEG
Digital Broadcasting Experts Group

C/N≦0 was measured with AWGN (Gaussian noise) under the SISO condition. U/C is applied to the measurements at Ch-7, 13, 14, 30, 33 and 51. The RF input at DEM was set to -28, -53, -68 and -83dBm.

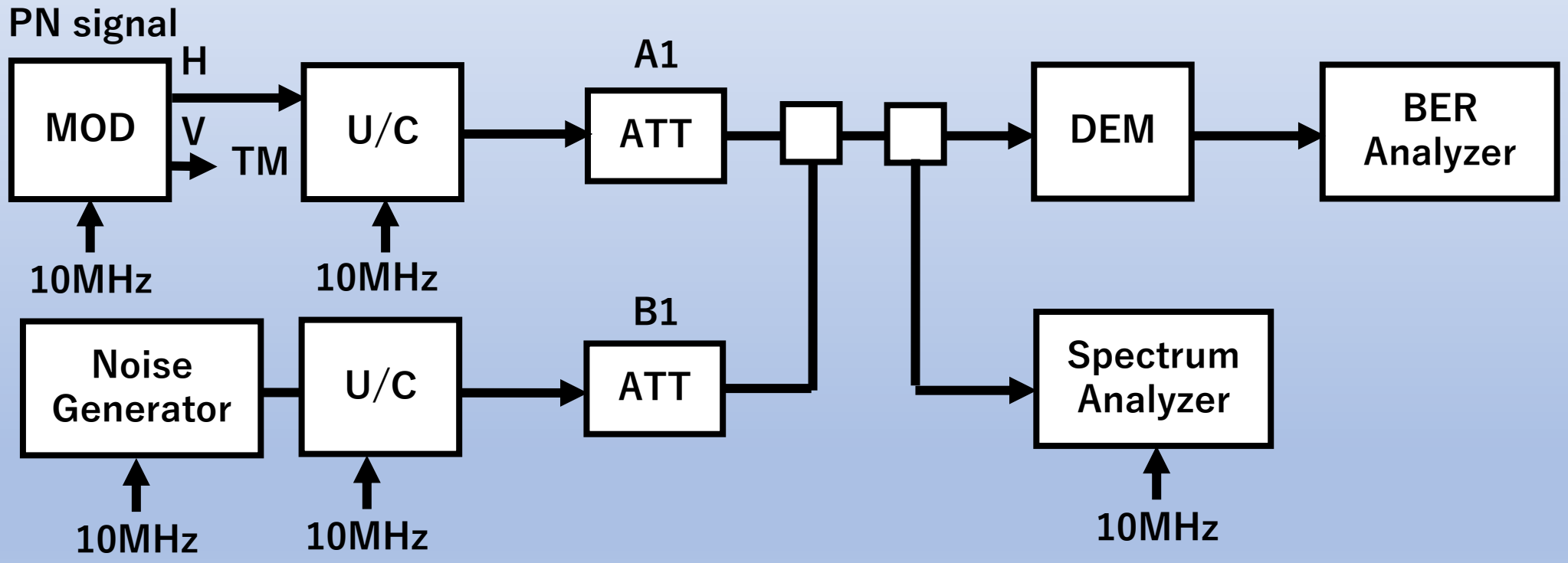

C/N - Carrier power vs. AWGN by SISO and MIMO

DiBEG
Digital Broadcasting Experts Group

C/N≦0 was measured with AWGN (Gaussian noise) under the MIMO condition. U/C is applied to the Ch-7, 13, 14, 30, 33 and 51 measurements. The RF input at DEM was set to -28, -53, -68 and -83dBm.

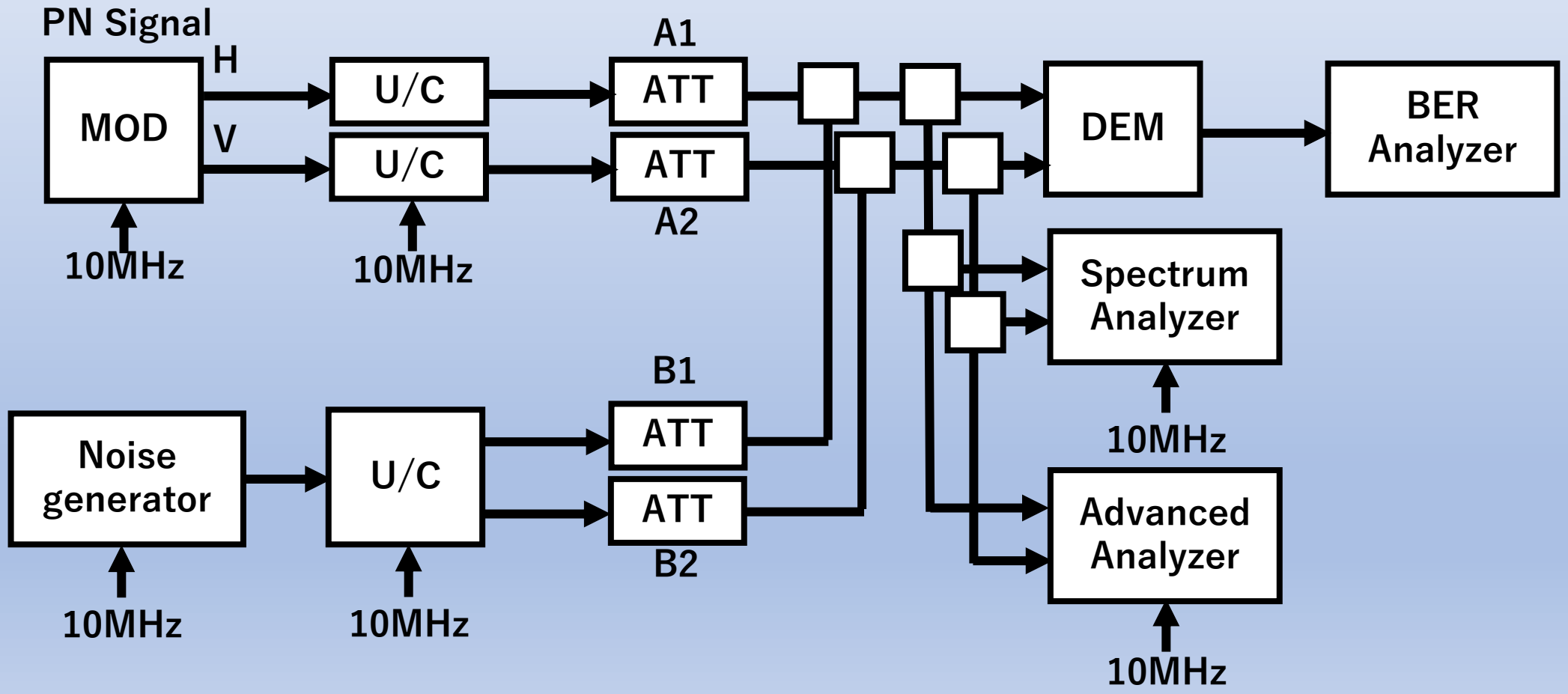

Results of C/N - Carrier power vs. AWGN by SISO and MIMO

DiBEG
Digital Broadcasting Experts Group

Measuring table of SISO and MIMO is mentioned as follows.

Ch.	RF IN Level(dBm)	SISO C/N	MIMO C/N	Remarks
Ch-14	-28	-1.0dB	-0.8dB / -0.8dB	By U/C
	-53	-1.1dB	-0.7dB / -0.7dB	Ditto
	-68	-1.1dB	-0.5dB / -0.8dB	Ditto
	-83	-1.2dB	-0.7dB / -0.7dB	Ditto
Ch-30	-28	-1.1dB	N/A	By U/C
	-53	-0.9dB	N/A	Ditto
	-68	-1.1dB	N/A	Ditto
	-83	-1.0dB	N/A	Ditto
Ch-51	-28	-1.0dB	-0.8dB / -0.9dB	By U/C
	-53	-1.1dB	-0.8dB / -0.9dB	Ditto
	-68	-1.1dB	-0.9dB / -0.8dB	Ditto
	-83	-1.1dB	-0.8dB / -0.9dB	Ditto

Results of C/N - Carrier power vs. AWGN by SISO and MIMO

DiBEG
Digital Broadcasting Experts Group

C/N is measured -28dBm input at DEM at Ch-51. This is the minimum C/N level.

Main H(C)

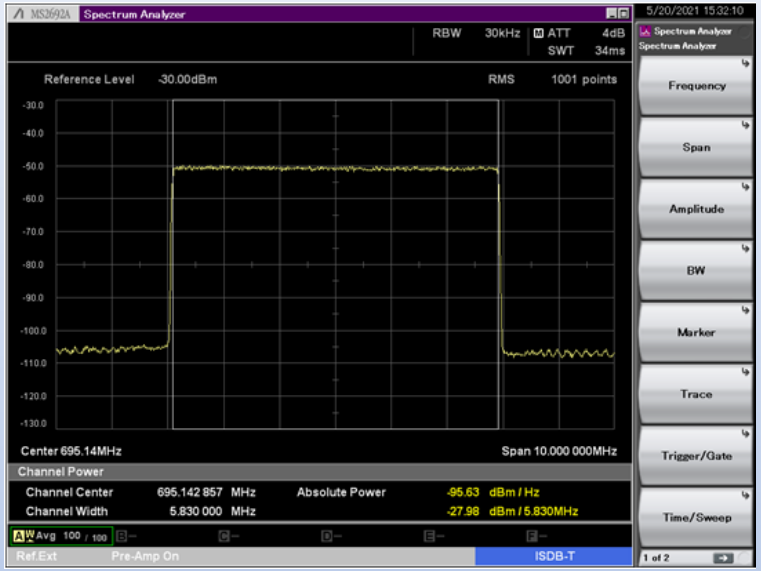

Nois e H(N)

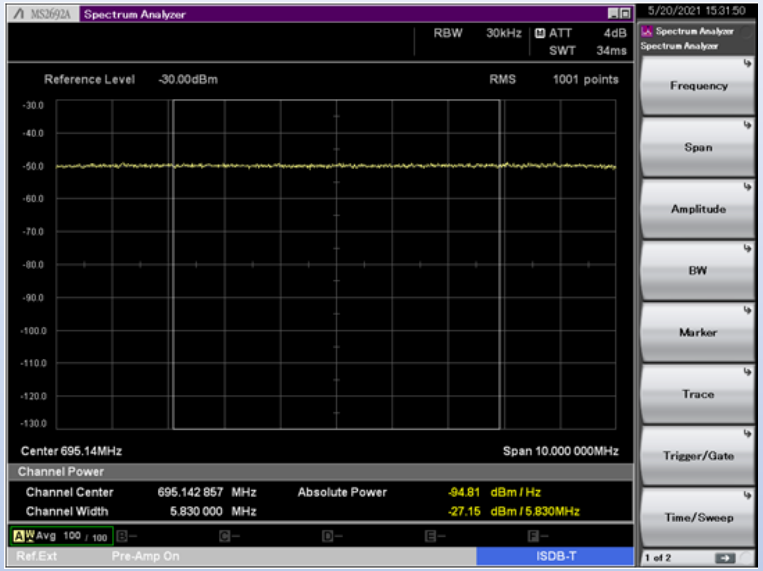

Main V(C)

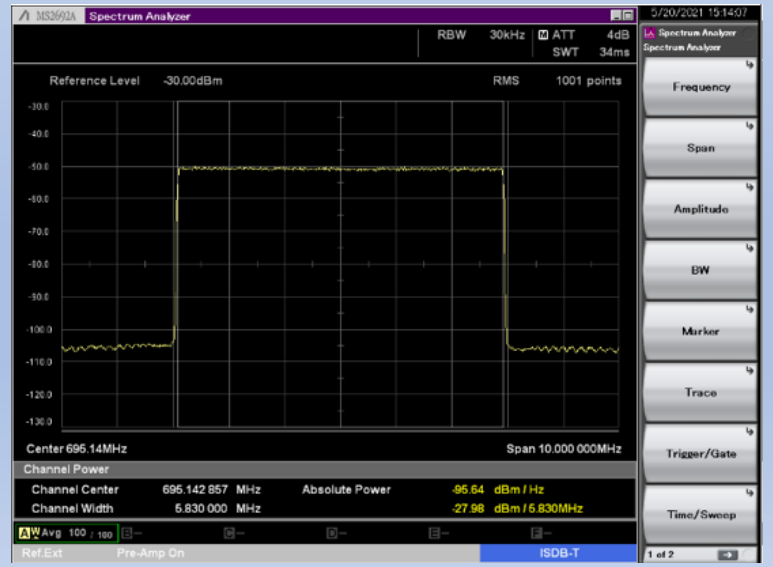

Nois e V(N)

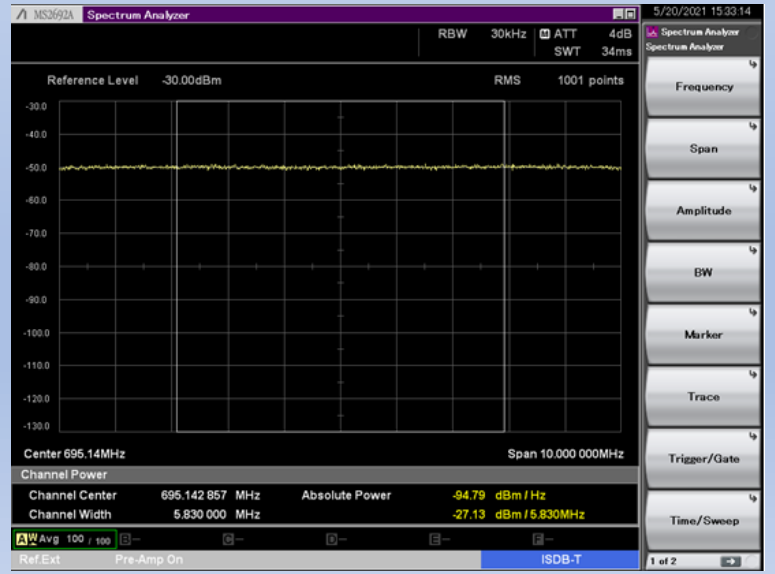

C/N - Carrier power vs. Rayleigh and AWGN by SISO and MIMO

DiBEG
Digital Broadcasting Experts Group

C/N≦0 was measured with Rayleigh noise under the SISO condition. U/C was applied to Ch-7, 13, 14, 33 and 51. Advanced Exciter is tuned to Ch-30. The RF input at DEM was set to -28, -53, -68 and -83dBm.

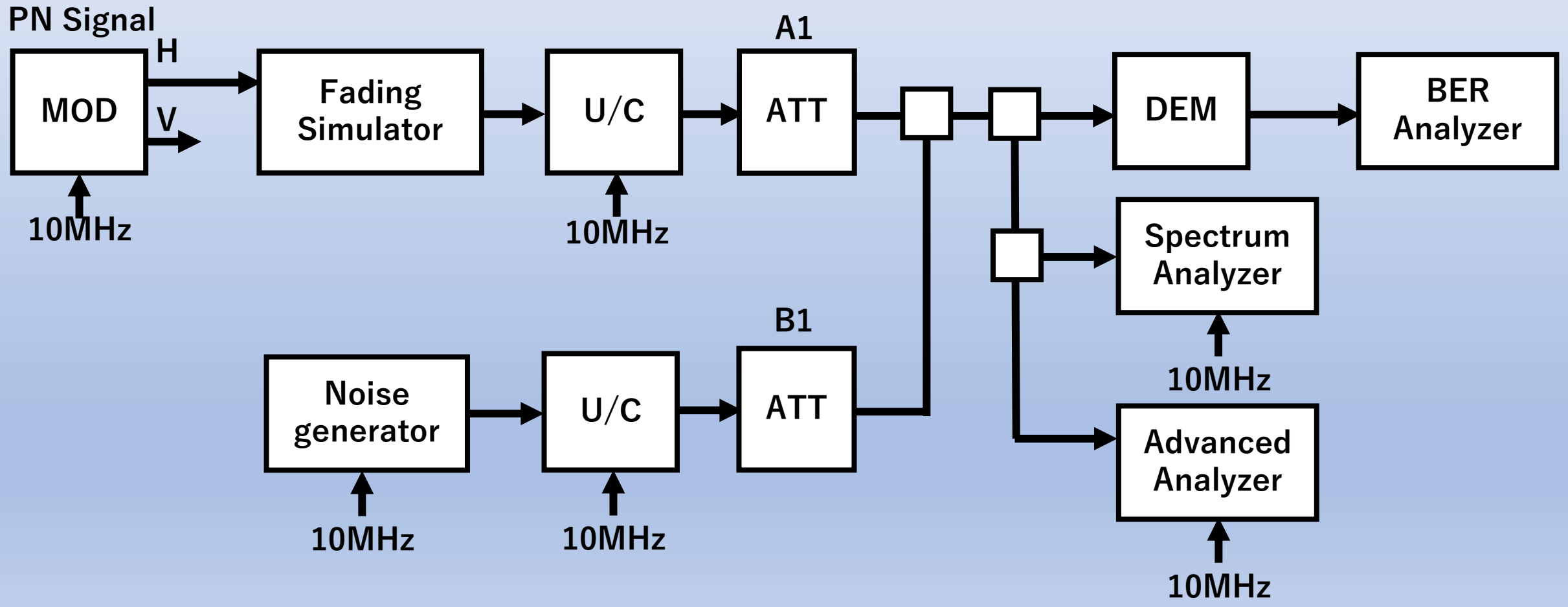

C/N - Carrier power vs. Rayleigh and AWGN by SISO and MIMO

DiBEG
Digital Broadcasting Experts Group

C/N≦0 was measured with Rayleigh noise under the MIMO condition. U/C was applied to the Ch-7, 13, 14, 33 and 51 measurements. The RF input at DEM was set to -28, -53, -68 and -83dBm.

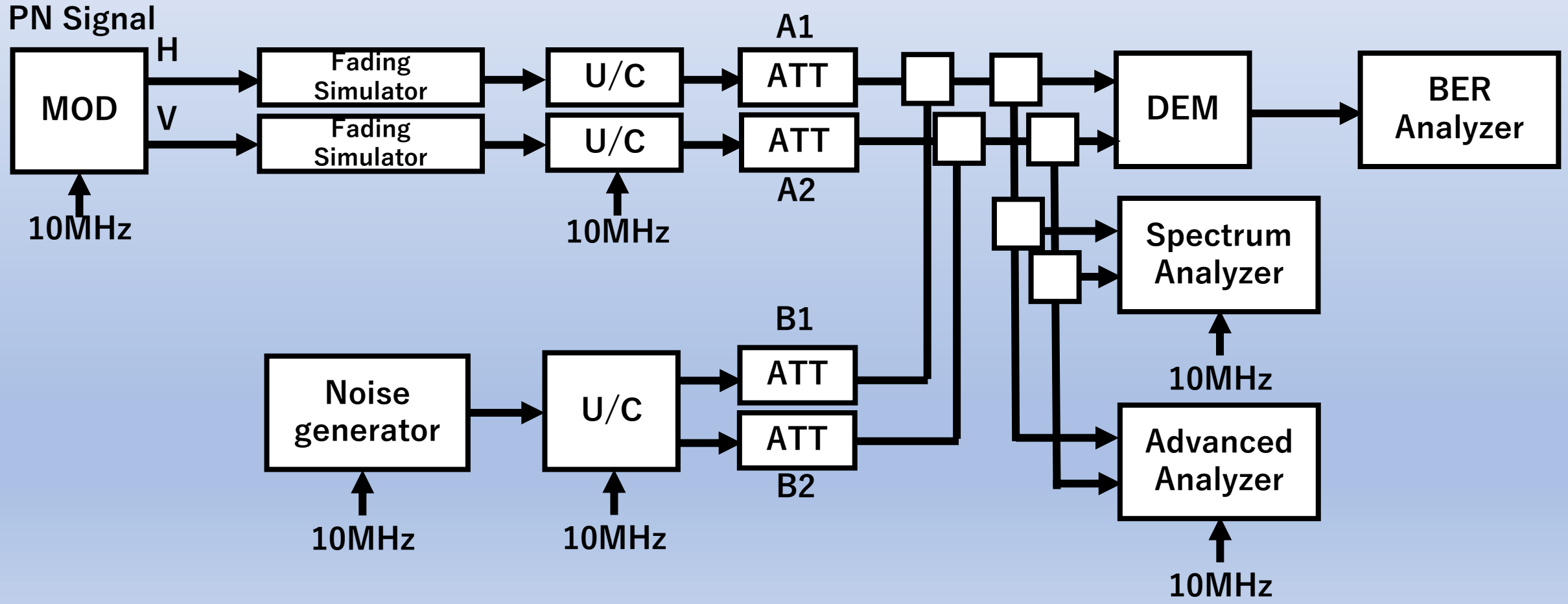

Result of C/N - Carrier power vs. Rayleigh and AWGN

DiBEG Digital Broadcasting Experts Group

RF3A/B is applied 70km/h

Measuring table of SISO and MIMO is mentioned as follows.

Ch.	RF IN Level(dBm)	SISO C/N (RF1)	SISO C/N (RF3A)	MIMO C/N (RF2A/2B)	MIMO C/N (RF3A/3B)	Remarks
Ch-7	-28	-1.0dB	0.2dB	0dB / 0dB	0.3dB / 0.3dB	By U/C
	-83	-1.0dB	0.3dB	0.2dB / 0.1dB	0.4dB / 0.4dB	Ditto
Ch-13	-28	-0.9dB	0.2dB	0.1dB / 0.1dB	1.0dB / 1.1dB	By U/C
	-83	-0.9dB	0.2dB	0.4dB / 0.4dB	1.5dB / 1.3dB	Ditto
Ch-14	-28	-1.1dB	0.2dB	0dB / 0dB	1.7dB / 1.7db	By U/C
	-83	-0.9dB	0.2dB	0.1dB / 0.1dB	1.6dB / 1.6dB	Ditto
Ch-30	-28	-1.0dB	0.3dB	N/A	N/A	By Exciter
	-83	-1.1dB	0.3dB	N/A	N/A	Ditto
Ch-33	-28	-1.1dB	0.3dB	-0.1dB / 0dB	3.7dB / 3.7dB	By U/C
	-83	-1.0dB	0.2dB	0dB / 0dB	3.2dB / 3.2dB	Ditto
Ch-51	-28	-1.0dB	0.4dB	0.2dB / 0.2dB	12.7 / 12.6dB	By U/C
	-83	-0.8dB	0.4dB	0.1dB / 0.1dB	9.1dB / 8.5dB	Ditto

Consideration of High speed reception in Japan

DiBEG
Digital Broadcasting Experts Group

C/N - Carrier power vs. Rayleigh

The tolerance against high-speed reception and bit rate depend on the FFT size. While the FFT size becomes larger, the symbol length becomes longer. Accordingly, higher bit rate can be achieved with large FFT size since the effective symbol length becomes longer when assuming the same guard interval length. On the other hand, by using a small FFT size, the tolerance against high-speed reception increases since the frequency interval between OFDM carriers becomes large. The laboratory tests were conducted by using 16k FFT size. This purpose was to increase the bit rate. By using 8k FFT, 120km/h high-speed reception can be achieved.

The tolerance of TMCC (Transmission and Multiplexing Configure Control) signal of the Advanced ISDB-T is mentioned in the following figure. As shown in the figure, the required C/N at 16k FFT deteriorates in the range over 120km/h. Since TMCC is the necessary signal to decode data, the data signal cannot be received in the range over 120km/h at 16k FFT. We understood this phenomenon in advance, but we decided to continue the test, putting the priority for higher bitrate.

Consideration of High speed reception in Japan

DiBEG
Digital Broadcasting Experts Group

C/N - Carrier power vs. Rayleigh

If the high-speed reception of 120km/h is prioritized than high bit rate, 8k FFT size must be selected rather than 16kFFT size. You can see from the figure that when 8k FFT size is applied, C/N of TMCC is not deteriorated even at 200km/h; therefore it will satisfy the requirement. The TV 3.0 Test Lab may conduct the tests with 8k FFT to confirm this.

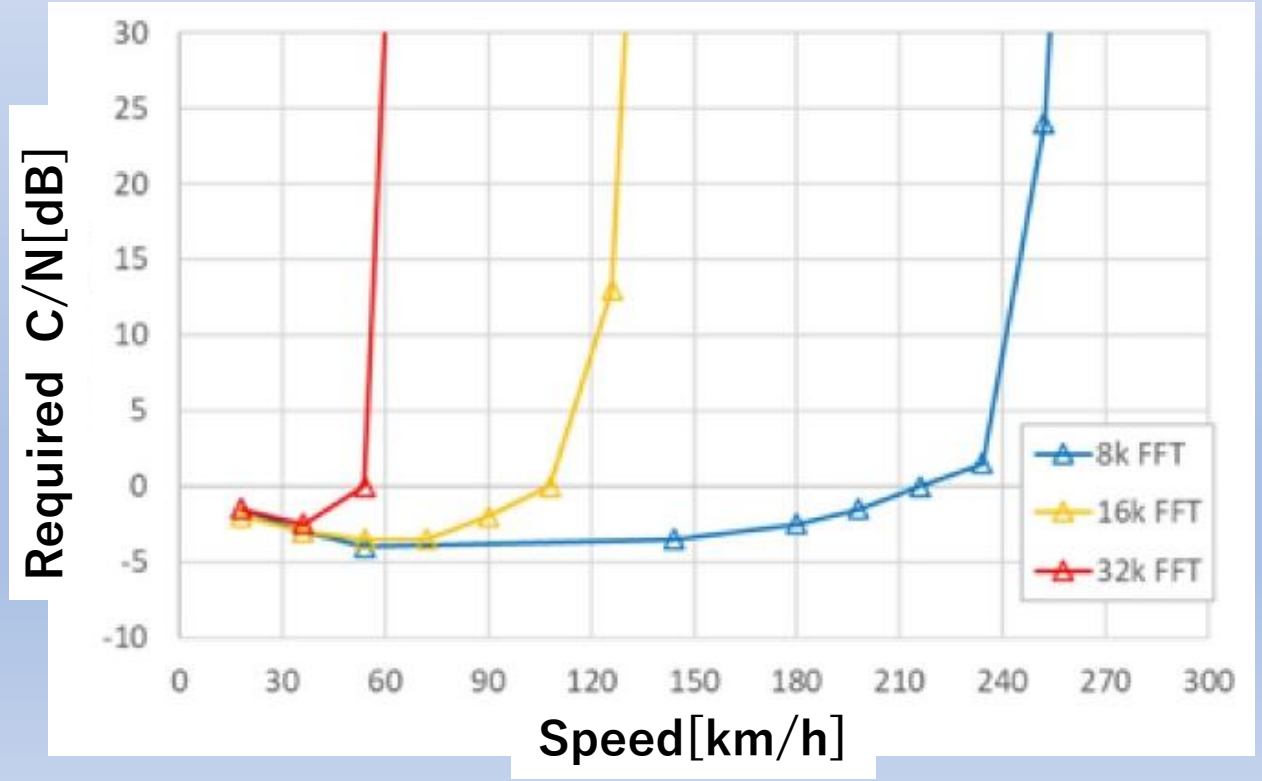

Tolerance of TMCC for mobile reception (Simulation result)
From the report of “Technical Test Project in Japan 2020”

Results of C/N - Carrier power vs. Rayleigh and AWGN

DiBEG
Digital Broadcasting Experts Group

C/N is measured by -28dBm input at DEM on Ch-51. RF2A of MIMO is applied.

Main
H(C)

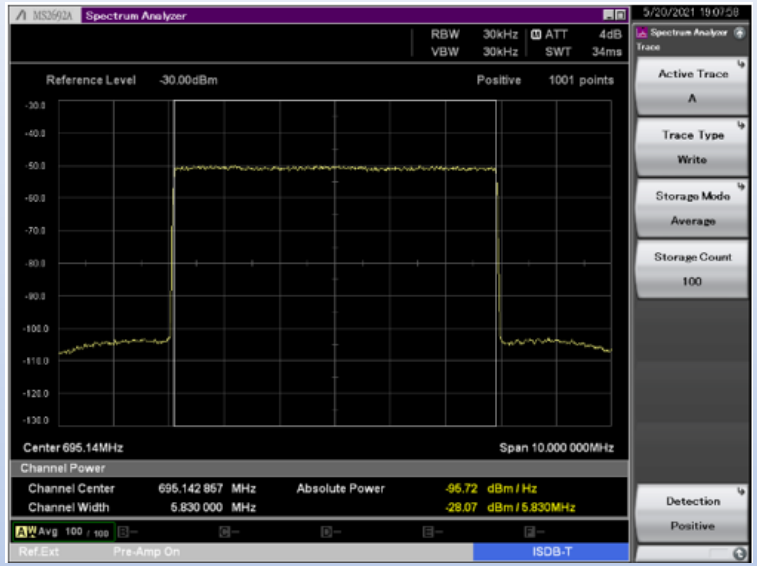

Noise
H(N)

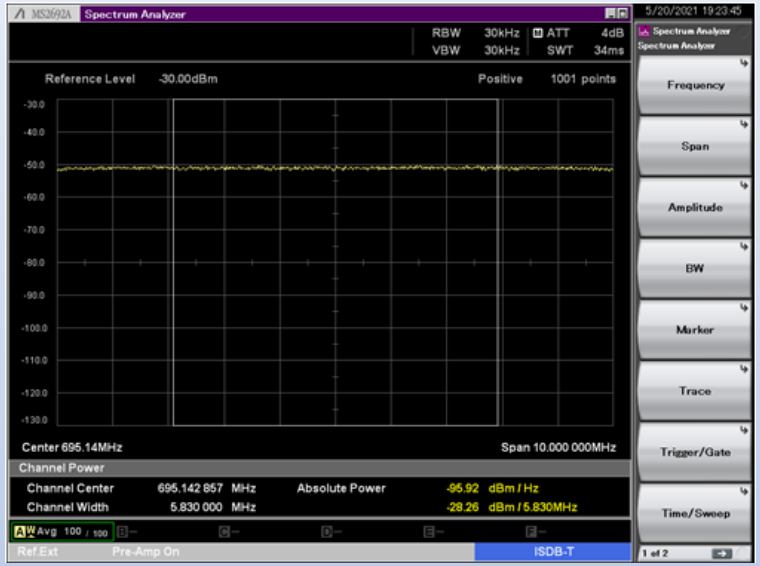

Main
V(C)

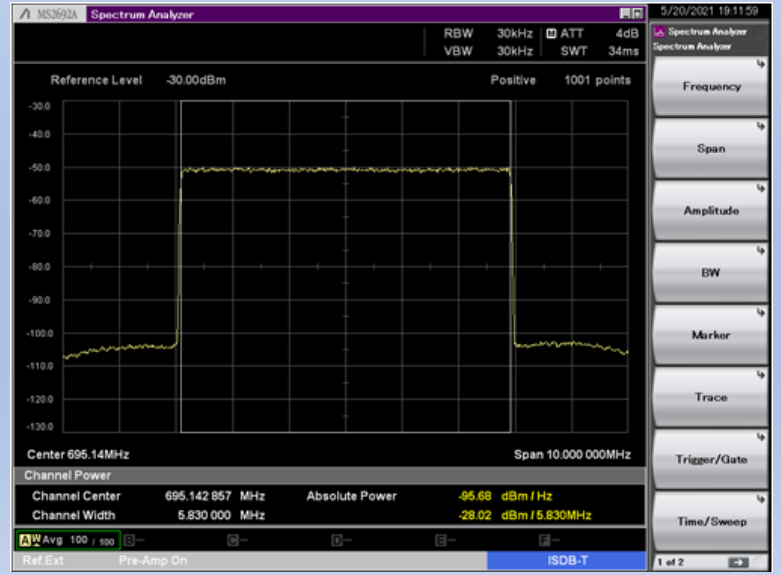

Noise
V(N)

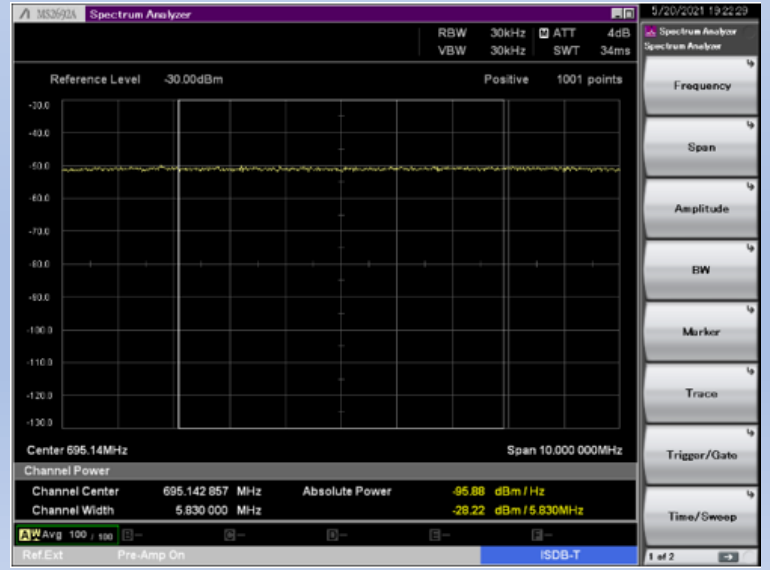

Receiver maximum and minimum level by MIMO

DiBEG
Digital Broadcasting Experts Group

Max. and Min. reception levels were measured under the MIMO condition with a BER Analyzer. U/C was applied to the Ch-7, 13, 14, 33 and 51 measurements. The Advanced ISDB-T exciter was tuned to Ch-30.

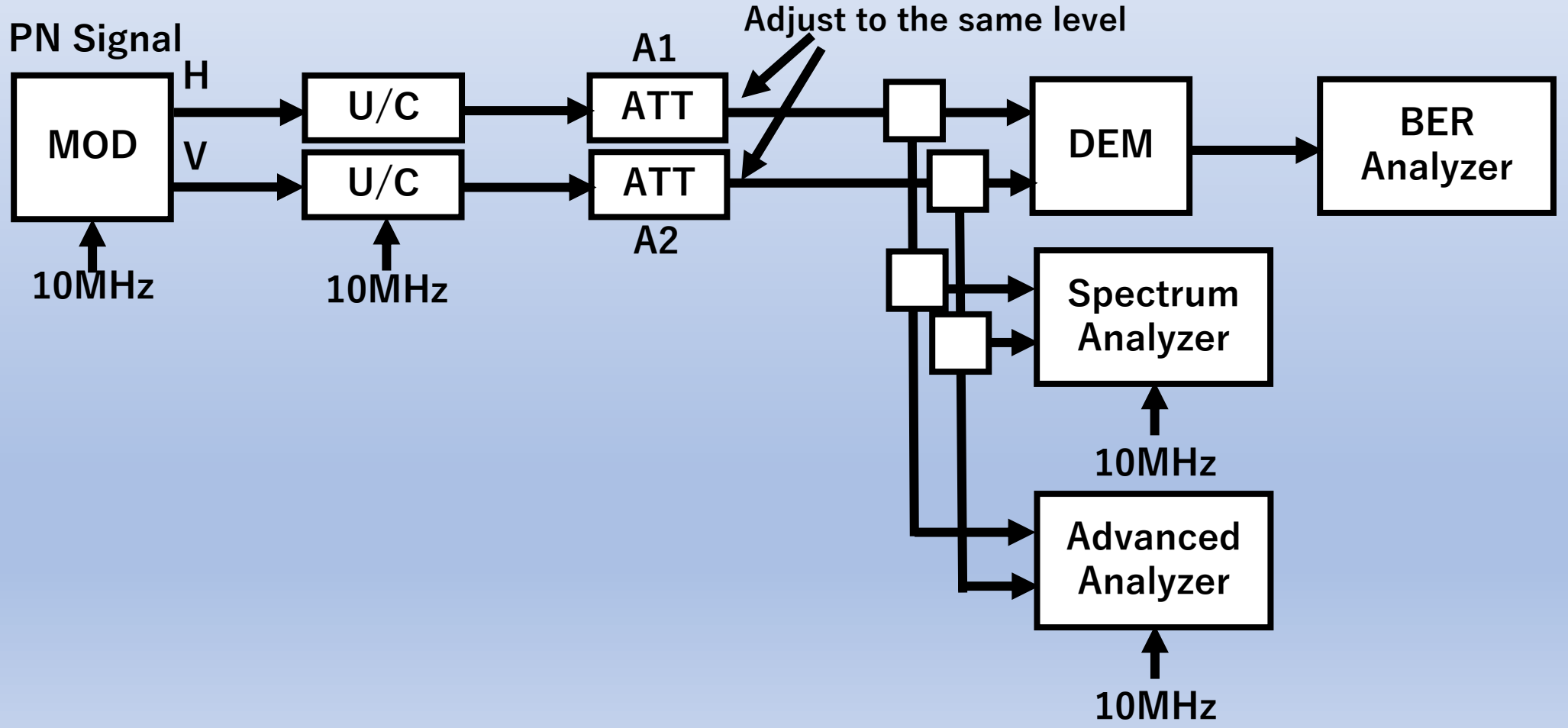

Results of Receiver maximum and minimum level by MIMO

DiBEG Digital Broadcasting Experts Group

Measuring table of SISO and MIMO is mentioned as follows.

Ch.	SISO Max Level	SISO Min Level	MIMO Max Level H / V	MIMO Min Level H / V	Remarks
Ch-7					By U/C
Ch-13	>-14dBm	<-95dBm	>-14dBm / >-14dBm	<-95dBm / <-95dBm	Ditto
Ch-14					Ditto
Ch-33					Ditto
Ch-51	>-16dBm	<-95dBm	>-16dBm />-16dBm	<-95dBm / <-95dBm	Ditto
Ch-30	>-16dBm	<-95dBm	>-16dBm />-16dBm	<-95dBm / <-95dBm	Ditto

* Maximum Level:
Signal reception was available, if ATT is removed.
Therefore the above maximum level was measured without ATT.

* Minimum Level:
ATT is inserted and the minimum level was measured at -95dBm with ATT.

Co-channel Interference with own system by MIMO

The co-channel interference was measured under the MIMO condition with a BER analyzer and the Advanced ISDB-T analyzer. U/C was applied to the Ch-10 and 33 measurements. The Advanced ISDB-T exciter was tuned to Ch-30. The RF input at DEM was set to -53dBm.

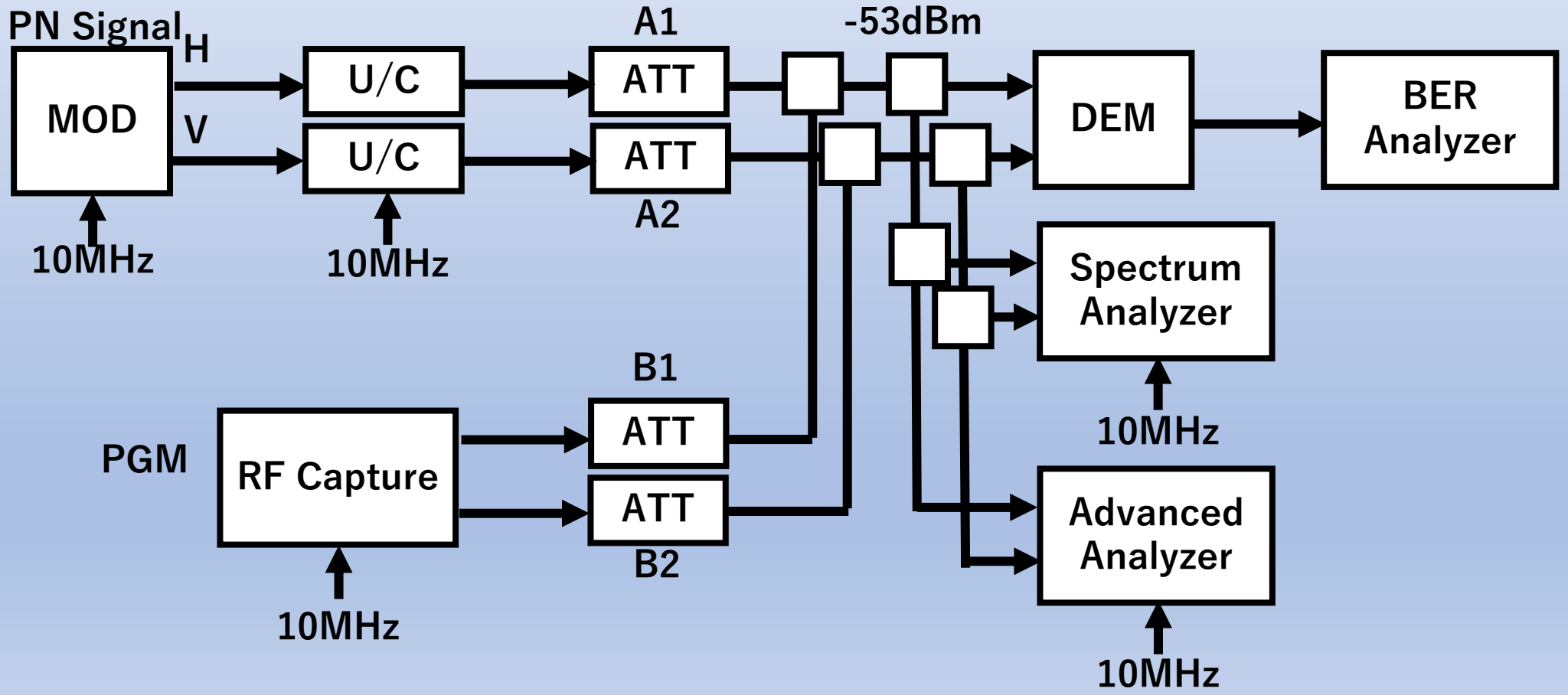

Results of Co-channel Interference with own system by MIMO

DiBEG
Digital Broadcasting Experts Group

SISO

Ch.	D/U (dB) Synchronization	D/U (dB) Un-synchronization	Remarks
Ch-10	N/A	1.3dB	By U/C
Ch-33	N/A	0.6dB	ditto
Ch-30	N/A	1.2dB	ditto

MIMO

Ch.	D/U (dB) Synchronization	D/U (dB) Un-synchronization	Remarks
Ch-10	N/A	1.6dB / 1.7dB	By U/C
Ch-33	N/A	0.9dB / 1.1dB	ditto
Ch-30	N/A	0.7dB / 0.9dB	ditto

Co-channel and adjacent channel interference to ISDB-T by SISO

The co-channel and adjacent channel interference was measured under the SISO condition with an ISDB-T STB. The U/C was applied to the Ch-28 to 32 measurements. The Advanced ISDB-T exciter was set to Ch-30.

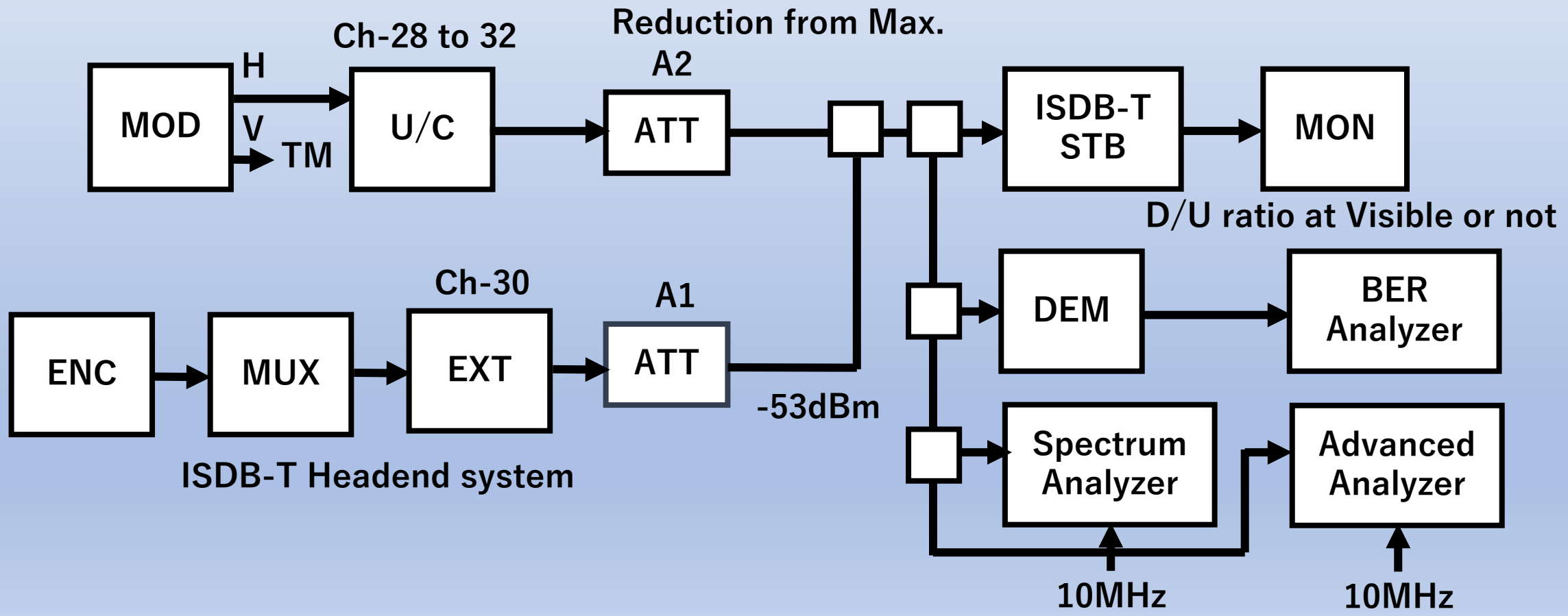

Results of Co-channel and adjacent channel interference to ISDB-T by SISO

DiBEG
Digital Broadcasting Experts Group

Measuring table of VHF and UHF of SISO is mentioned as follows.

Protection Ratio D/U (dB)			Remarks
Desired Channel	Interference Channel	Receiver D/U (dB)	
VHF ISDB-T: Ch-10	Ch-8	N/A	
	Ch-9	N/A	
	Ch-10	N/A	
	Ch-11	N/A	
	Ch-12	N/A	
UHF ISDB-T: Ch-30	Ch-28	<-38dB*	Refer to 6.10.1
	Ch-29	-35.6dB	
	Ch-30	17.6dB	Refer to 6.10.2 to 4
	Ch-31	-30.9dB	
	Ch-32	<-38dB*	

* Signal reception is available, if ATT of A2 side (MOD side) is removed.
Then data of Ch-28 and Ch-32 is reference D/U data in this case.

Results of Co-channel and adjacent channel interference to ISDB-T by SISO

Measuring photos are mentioned as follows.

6.10.1
Ch-28

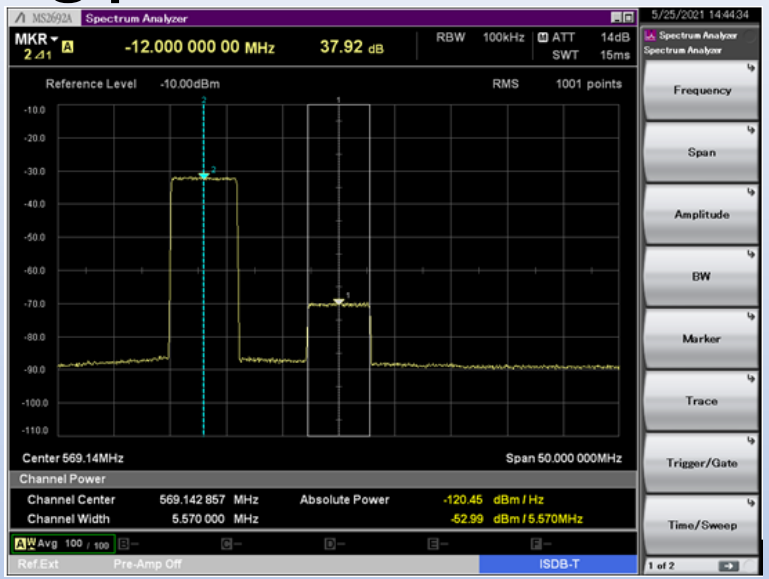

6.10.2
Ch-30
Minimum
reception

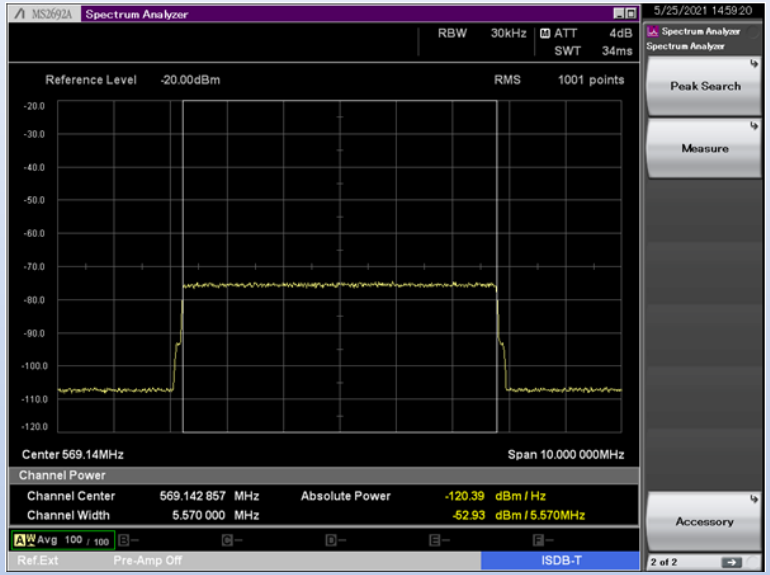

6.10.3
Ch-30
ISDB-T
side

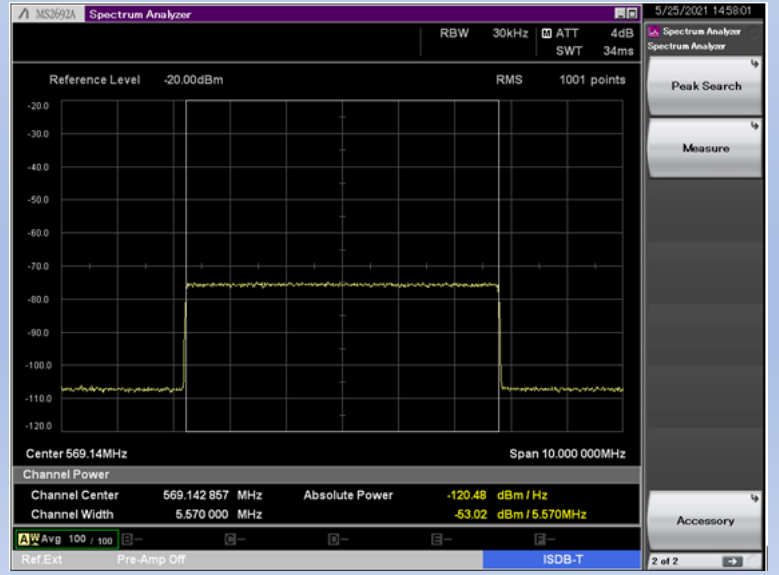

6.10.4
Ch-30
SISO
side

Single echo static multipath interference by SISO

DiBEG
Digital Broadcasting Experts Group

Transmission performance of SISO against multipath was measured. U/C was applied to the Ch-10 measurements. The Advanced ISDB-T exciter was tuned to Ch-30. The RF input at DEM was set to -53dBm.

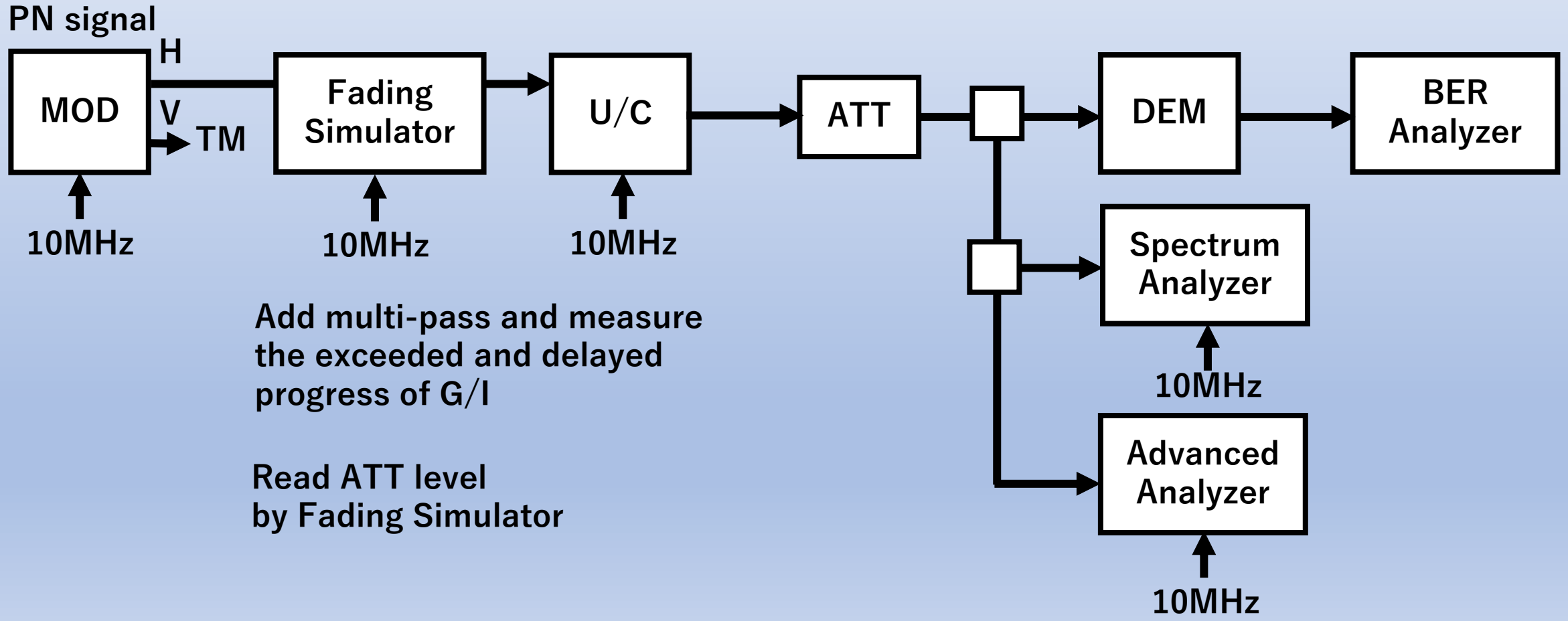

Results of Single echo static multipath interference by SISO

DiBEG
Digital Broadcasting Experts Group

Measuring table of Ch-10 and Ch-30 is mentioned as follows.

No.	Delay (us)	Ch-10 ATT(dB)	Ch-30 ATT(dB)	No.	Delay (us)	Ch-10 ATT(dB)	Ch-30 ATT(dB)	No.	Delay (us)	Ch-10 ATT(dB)	Ch-30 ATT(dB)
1	2,000	2.5	2.6	13	650	2.1	2.1	25	150	0	0
2	1,800	2.5	2.6	14	648	1.8	1.9	26	100	0	0
3	1,600	2.5	2.6	15	600	1.8	1.8	27	70	0	0
4	1,500	2.5	2.6	16	500	1.8	1.8	28	65	0	0
5	1,400	2.5	2.6	17	400	1.8	1.8	29	63	0	0
6	1,300	2.5	2.6	18	350	1.8	1.8	30	60	0	0
7	1,200	2.5	2.6	19	340	1.8	1.8	31	40	0	0
8	1,100	2.5	2.6	20	330	1.8	1.8	32	20	0	0
9	1,000	2.5	2.6	21	325	1.8	1.8	33	0	0	0
10	900	2.5	2.6	22	324	0	0	34	-20	0	0
11	800	2.5	2.6	23	300	0	0	35	-40	0	0
12	700	2.5	2.6	24	200	0	0	36	-60	0	0

Results of Single echo static multipath interference by SISO

DiBEG
Digital Broadcasting Experts Group

Measuring table of Ch-10 and Ch-30 is mentioned as follows.

No.	Delay (us)	Ch-10 ATT(dB)	Ch-30 ATT(dB)	No.	Delay (us)	Ch-10 ATT(dB)	Ch-30 ATT(dB)	No.	Delay (us)	Ch-10 ATT(dB)	Ch-30 ATT(dB)
37	-63	0	0	49	-400	1.8	1.8	61	-1,400	2.5	2.5
38	-65	0	0	50	-500	1.8	1.8	62	-1,500	2.5	2.5
39	-70	0	0	51	-600	1.8	1.8	63	-1,600	2.5	2.5
40	-100	0	0	52	-648	1.8	1.8	64	-1,800	2.5	2.5
41	-150	0	0	53	-650	2.0	2.0	65	-2,000	2.5	2.5
42	-200	0	0	54	-700	2.5	2.5				
43	-300	0	0	55	-800	2.5	2.5				
44	-324	0	0	56	-900	2.5	2.5				
45	-325	1.8	1.8	57	-1,000	2.5	2.5				
46	-330	1.8	1.8	58	-1,100	2.5	2.5				
47	-340	1.8	1.8	59	-1,200	2.5	2.5				
48	-350	1.8	1.8	60	-1,300	2.5	2.5				

Channel bonding by MIMO

Channel bonding test was conducted with two sets of MIMO configuration. One signal was transmitted in Ch-10 and the other one was transmitted in Ch-33. The RF input at DEM was set to -53dBm. Channel bonding function will be applied to the Advanced ISDB-T in the near future.

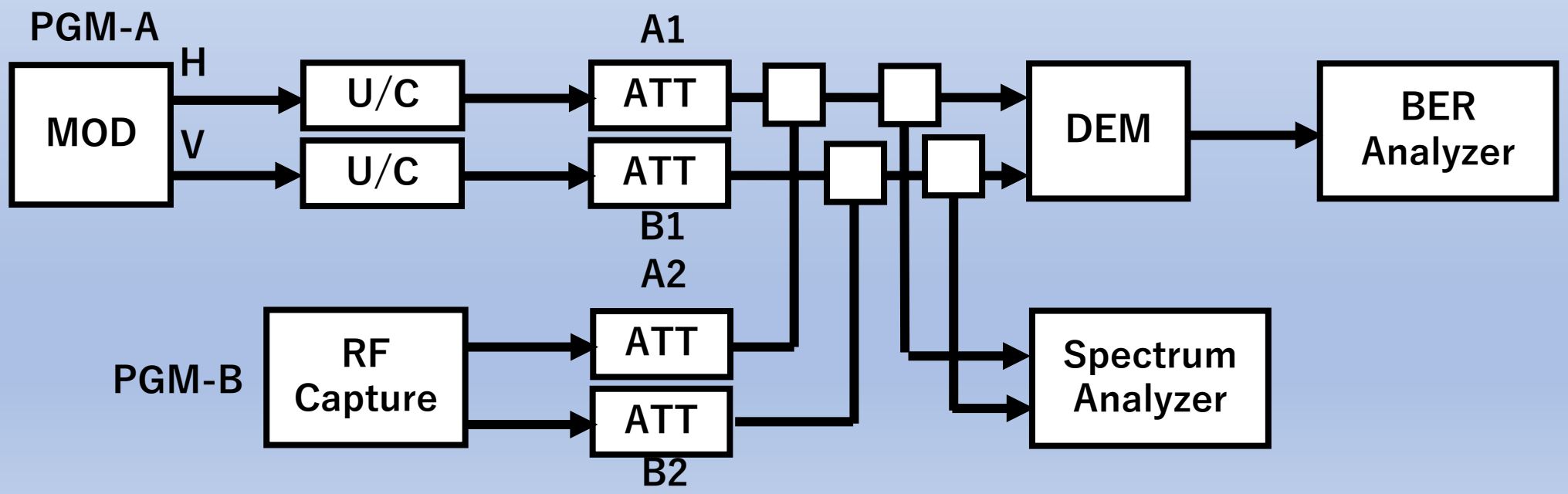

Consideration of Channel Bonding in Japan

DiBEG
Digital Broadcasting Experts Group

BICM：Bit Interleaved Coded Modulation

Since channel bonding function is included in the requirements of Japan's next generation DTTB, it is considered in the Technical Test Project in Japan 2020. Currently, two different modes of channel bonding schemes are considered in the Advanced ISDB-T. In 2021, the channel bonding function of "Dividing before BICM" at left side is planned to be verified by hardware at the Technical Test Project.

Mode	Dividing before BICM	Dividing at BICM
Method for dividing data into 2 different RF channel	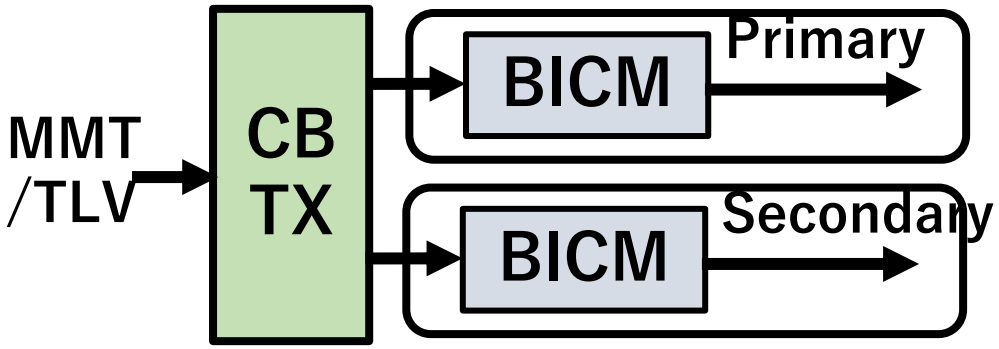	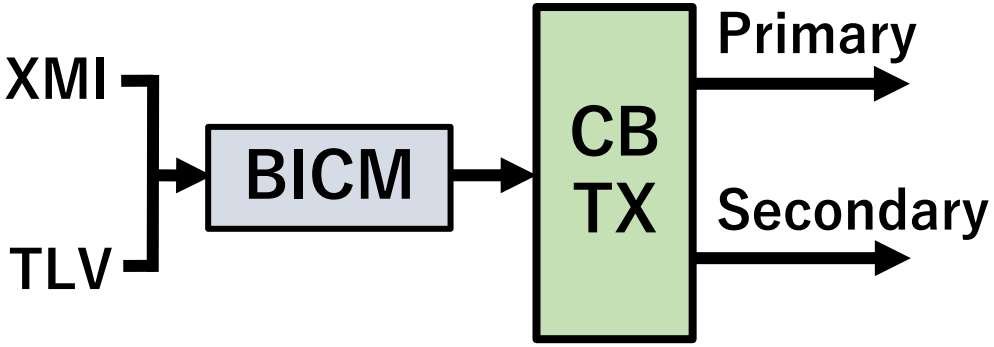

Considered Channel bonding scheme for the Advanced ISDB-T
From the report of "Technical Test Project in Japan 2020"

Channel identification stability in frequency reuse-1 by MIMO

The channel identification stability was tested with one MIMO and one RF capture configuration. Both MIMO systems were transmitted in Ch-10 or Ch-30. The RF input at DEM was set to -53dBm. The channel identification function will be applied to the Advanced ISDB-T in the near future.

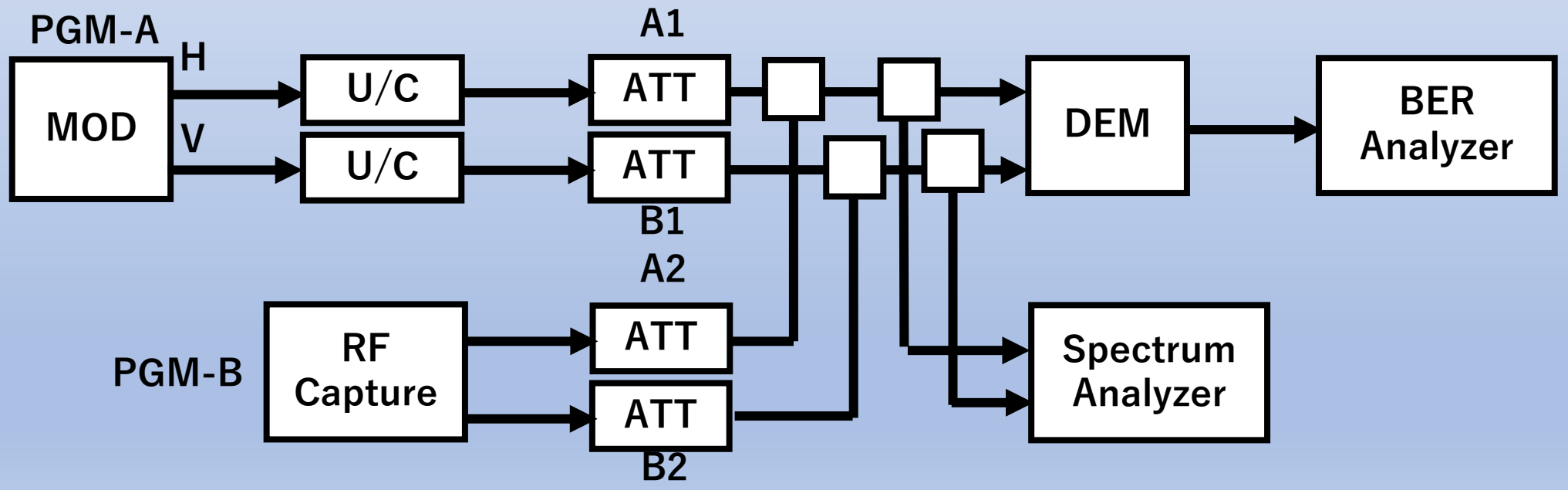

Consideration of Frequency Reuse-1 in Japan

DiBEG
Digital Broadcasting Experts Group

The current prototype Advanced ISDB-T receiver of the Demodulator is basically designed for Japan's next generation DTTB, which will be improved by the Frequency reuse-1.

Since the Advanced ISDB-T can achieve under 0dB required C/N, by designing the receiver algorithm for the Frequency reuse-1 from the very beginning of the receiver development, it will be able to achieve the requirements.

FM Radio (88 to 108 MHz) Interference by SISO

This test was conducted under the SISO condition. The power level of U/C was set at -80, -70, -60, -50, -40, -30 and -20 dBm. The QEF level of DEM was measured. U/C was applied to the Ch-7, 13, 15, 33 and 50 measurements. The Advanced ISDB-T exciter was tuned to Ch-30.

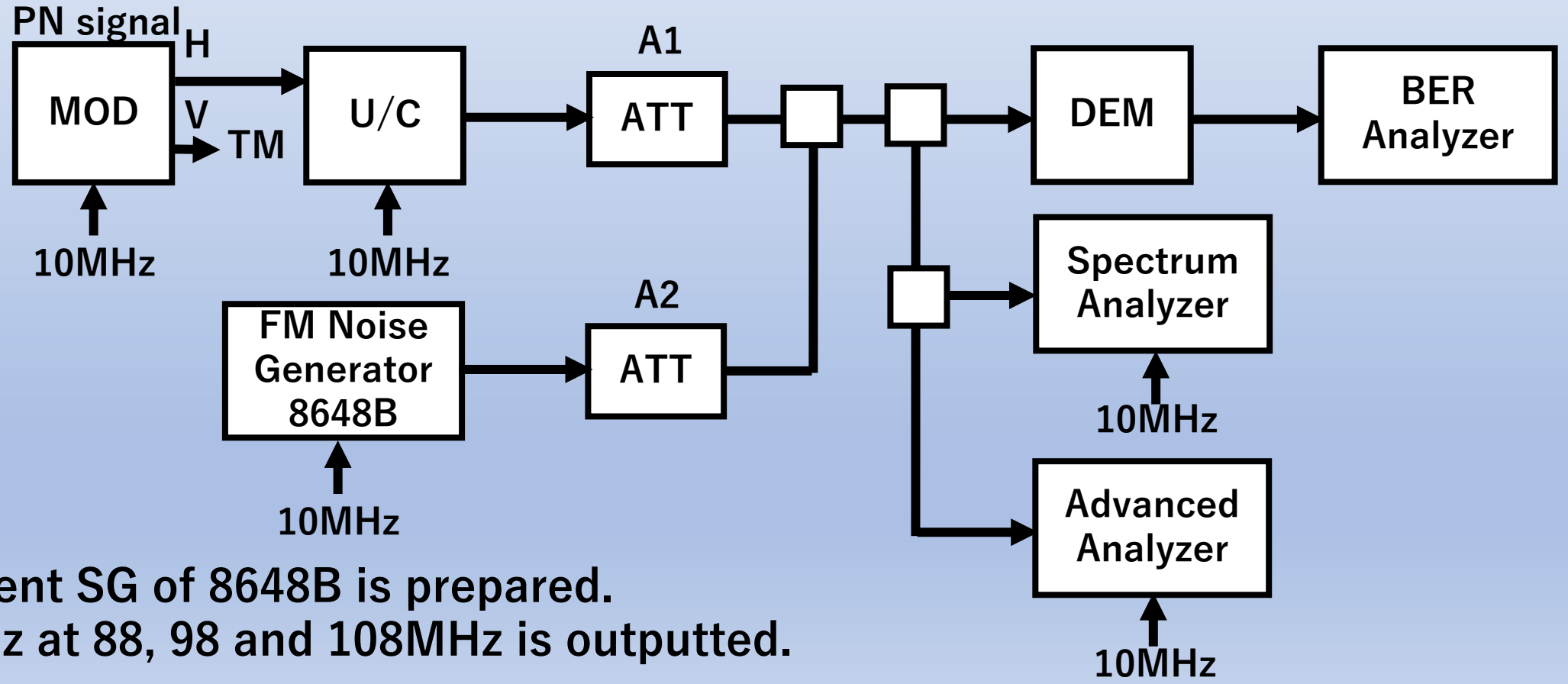

Agilent SG of 8648B is prepared.
1KHz at 88, 98 and 108MHz is outputted.

Results of FM Radio Interference by SISO

DiBEG
Digital Broadcasting Experts Group

Measuring table of Ch-13, Ch-50 and Ch-30 is mentioned as follows.

TV Level (dBm)	Ch-7	Ch-13	Ch-15	Ch-33	Ch-50	Ch-30
	QEF Level (dBm)					
-20		>-1dBm			>-1dBm	>-1dBm
-30						
-40						
-50		>-1dBm			>-1dBm	
-60						
-70						
-80		-20dBm			>-1dBm	>-1dBm

* TV Level : Input Level into Demodulator from SISO Modulator
* QEF Level : FM wave Level (Max -1dBm)
* Input FM freq. : 88, 98 and 108MHz
* Comment : Above measuring date is same among 88, 98 and 108MHz.
  : Low reception level at VHF frequency is affected from FM wave level.

DiBEG
Digital Broadcasting Experts Group

Muito obrigado!

ARIB / DiBEG extend technical cooperation to Brazil adopting Next Generation Broadcasting Standard!

di-jim3 @ arib.or.jp

ARIB
ASSOCIATION OF RADIO INDUSTRIES AND BUSINESSES

DiBEG
Digital Broadcasting Experts Group